olivetti

FAX OPERATION GUIDE

d-COLORMF3000

GB

Code: 560221en

PUBLICATION ISSUED BY:
Olivetti S.p.A.
Gruppo Telecom Italia
Via Jervis, 77 - 10015 Ivrea (ITALY)
www.olivetti.com

Copyright © 2011, Olivetti
All rights reserved

The mark affixed to the product certifies that the product satisfies the basic quality requirements.

The manufacturer reserves the right to carry out modifications to the product described in this manual at any time and without any notice.

ENERGY STAR is a U.S. registered mark.

The ENERGY STAR program is an energy reduction plan introduced by theUnited States Environmental Protection Agency in response to environmental issues and for the purpose of advancing the development and utilization of more energy efficient office equipment.

Your attention is drawn to the following actions which could compromise the conformity attested to above, as well as the characteristics of the product:

- incorrect electrical power supply;
- incorrect installation, incorrect or improper use or use not in compliance with the warnings provided in the User's Manual supplied with the product;
- replacement of original components or accessories with others of a type not approved by the manufacturer, or performed by unauthorised personnel.

All rights reserved. No part of this material may be reproduced or transmitted in any form or by any means, electronic or mechanical, including photocopying, recording or by any information storage and retrieval system, without permission in writing from the Publisher.

Thank You

Thank you for purchasing a d-Color MF3000. You have made an excellent choice. This User's Guide describes operating procedures and precautions for the use of the Fax functions. Be sure to read this User's Guide before starting any machine operations.

In order to ensure correct use of the Fax functions, read this User's Guide, and then store it where it can immediately be referred to when necessary.

Trademarks

Windows, Windows NT, Windows Server is a registered trademark or trademark of Microsoft Corporation in the United States and/or other countries.

Ethernet is a registered trademark or trademark of Xerox Corporation in the United States and/or other countries.

IEEE and the IEEE logo are registered trademarks or trademarks of The Institute of Electrical and Electronics Engineers, Inc. in the United States and/or other countries.

All other trademarks and registered trademarks are the property of their respective owners.

Manual Notice

Olivetti S.p.A. reserves the right to make changes to this guide and to the equipment described herein without notice. Considerable effort has been made to ensure that this guide is free of inaccuracies and omissions. However, Olivetti S.p.A. makes no warranty of any kind including, but not limited to, any implied warranties of merchantability and fitness for a particular purpose with regard to this guide. Olivetti S.p.A. assumes no responsibility for, or liability for, errors contained in this guide or for incidental, special, or consequential damages arising out of the furnishing of this guide, or the use of this guide in operating the equipment, or in connection with the performance of the equipment when so operated.

Contents

Thank You x-1
Trademarks x-1
Copyright Notice x-1
Manual Notice x-2

1 Introduction 1-1
Machine Parts 1-2
Front View 1-2
Rear View 1-2
About the Control Panel 1-3
Touch panel 1-6
Home screen 1-6
Initial Fax screen 1-8
Keys and icons that appear in the screens 1-9
User authentication and account track 1-11
With user authentication 1-11
Device authentication 1-11
External server authentication 1-11
With account track 1-12
Initial settings 1-13

G3 fax settings 1-13
[Date & Time Settings] 1-13
[Fax Target] 1-13
[Sender Settings] 1-13
[Comm. Settings] 1-13
Internet fax settings 1-14
[TCP/IP Settings] 1-14
[Network Fax Functions Settings] 1-14
[E-mail TX (SMTP)] 1-14
[E-mail RX (POP)] 1-14
[Subject] 1-14
[Text] 1-14
Useful functions 1-15

2 Fax Settings screen 2-1
[Fax Settings] (User Settings) 2-2
Settings 2-2
[Fax Settings] (Admin Settings) 2-4
Settings 2-8
[Sender Settings] 2-8
[Header/Footer Settings] 2-9
[Comm. Settings] 2-10
[Function Settings] 2-12
[Fax Function Settings] 2-13
[Memory RX] 2-15
[Closed Network RX Password] 2-15
[Forward TX Settings] 2-15
[Remote RX Settings] 2-16
[PC-Fax RX Settings] 2-16
[Nighttime RX Settings] 2-17
[PBX Connection Settings] 2-17
[Fax Report] 2-18
[List Print] 2-19
[Fax Target] 2-20
[Fax Factory Default] 2-20
[Fax Image Initialized] 2-20

3 Sending faxes 3-1
General operation 3-2
Positioning the original document 3-4
Using the ADF 3-4
Using the original glass 3-5
Specifying destinations 3-7
Selecting from the registered destinations 3-7
Selecting from the Favorites list 3-7
Selecting with an index search 3-7

Selecting by searching for a destination type or name 3-8
Directly typing in the address 3-8
G3 fax 3-8
Internet fax 3-9
Selecting from the log 3-9
Selecting with an LDAP search 3-10
Specifying scan settings 3-11
[Original Type] 3-11
[Resolution] 3-11
[Separate Scan] 3-11
Procedure 3-12
[Density] 3-12
[Background Removal] 3-12
[Sharpness] 3-12
Specifying communication settings (G3 fax) 3-13
[ECM OFF] 3-13
[V34 OFF] 3-13
[Check Dest. & Send] 3-13
Useful transmission functions (G3 fax) 3-14
[Timer TX] 3-14
[Password TX] 3-15
[F-Code TX] 3-15
Specifying e-mail (Internet fax) settings 3-17
Specifying document settings 3-18
[Original Size] 3-18
[Long Original] 3-18
[Simplex/Duplex] 3-18
[Binding Position] 3-19
Sending to multiple destinations (broadcast transmissions) 3-20
Selecting a program destination 3-21
Faxing manually (G3 fax) 3-22
If the fax cannot be sent (automatic redialing) (G3 fax) 3-23
Canceling a queued transmission 3-23
Adding the transmitting subscriber identification 3-24
G3 fax 3-24
Internet fax 3-24

4 Receiving faxes 4-1
Receiving G3 faxes 4-2
Automatic reception 4-2
Manual reception 4-3
With the control panel 4-3
With an external telephone 4-3
DRPD 4-4
[Ring Pattern] 4-4
Receiving Internet faxes 4-5

Useful reception functions **4-6**
Polling reception (G3 fax) 4-6
Performing a polling reception 4-6
Memory reception (G3 fax/Internet fax) 4-7
Using received documents 4-7
Closed network reception (G3 fax) 4-7
Fax forwarding (G3 fax/Internet fax) 4-8
E-mail forwarding (G3 fax/Internet fax) 4-8
Remote reception (G3 fax) 4-9
Giving the reception command from an external telephone 4-9
Night reception (G3 fax/Internet fax) 4-10
Printing received faxes **4-11**
Determining the paper size 4-11
Step 1: Determining the most suitable paper size 4-11
Step 2: Determining the actual paper size used for printing 4-12
Reducing and splitting 4-12
When [Tray Selection for RX Print] is set to a specific drawer 4-12
When [Min. Reduction for RX Print] is set to [100%] 4-13
When [Print Separate Fax Pages] is set to [OFF] 4-13
When [Print Separate Fax Pages] is set to [ON] 4-13
Adding reception information **4-14**

5 Sending/receiving a PC fax **5-1**
Sending a PC fax **5-2**
Transmission operation 5-2
Selecting a recipient from the phone book 5-3
Selecting a recipient from the address book 5-4
Specifying transmission conditions 5-4
Creating a fax cover sheet 5-5
[FAX Cover Sheet Settings] dialog box 5-5
[Basic] tab 5-6
[Recipient] tab 5-6
[Sender] tab 5-7
[Image] tab 5-7
Fax driver settings **5-8**
[Printing Preferences] dialog box 5-8
[Properties] dialog box 5-8
Common Settings 5-9
[FAX] tab 5-10
[Basic] tab 5-11
[Authentication/Account Track] dialog box 5-12
[Layout] tab 5-12
[Configure] tab 5-13
[Settings] tab 5-13
Saving fax driver settings 5-14
Saving the settings 5-14

Editing settings 5-14
Using the phone book 5-15
Adding recipients to a phone book 5-15
Editing a phone book 5-16
Changing personal information 5-16
Changing group membership 5-17
Changing a group name 5-17
Creating a folder 5-17
Searching for personal information 5-17
Receiving a PC fax 5-18
Using received documents 5-18
Uninstalling the fax driver 5-19

6 Registering destinations 6-1
Destination registration 6-2
Address Book 6-2
Group 6-2
Program 6-2
Registering an address book destination 6-3
G3 fax 6-3
Settings 6-4
Internet fax 6-5
Registering a program destination 6-6

7 Communication management 7-1
Checking a job 7-2
Checking jobs being performed 7-2
Transmission jobs 7-2
Reception jobs 7-2
Checking the job log 7-3
Transmission jobs 7-3
Reception jobs 7-3
Printing reports/lists 7-4
Types of reports 7-4
Types of lists 7-5
Activity Report 7-6
Items that are printed 7-6
TX Result Report 7-7
Items that are printed 7-7
Reservation TX Report 7-8
Items that are printed 7-8
Broadcast Result Report 7-9
Items that are printed 7-9
Broadcast Reservation Report 7-10
Items that are printed 7-10
PC-Fax TX Error Report 7-11

Items that are printed 7-11
I-Fax RX Error Report 7-11
Items that are printed 7-11
Address Book List/Group List/Program List 7-12
Fax Setup Information list 7-12

8 Troubleshooting 8-1
Problems when sending faxes 8-2
G3 fax 8-2
Internet fax 8-4
PC fax 8-4
Problems when receiving faxes 8-6
G3 fax 8-6
Internet fax 8-7
Other problems 8-8
Error messages 8-9

9 Appendix A-1
Technical specifications A-2
G3 fax A-2
Internet fax A-2
PC fax (Fax driver) A-3
Text input A-4
Entering text A-4

Introduction

1

Machine Parts

The parts of the machine referred to throughout this manual are illustrated below. Please take some time to become familiar with them.

Front View

1: Control panel

2: Automatic Document Feeder (ADF)

- 2-a: ADF feed cover
- 2-b: Document guide
- 2-c: Document feed tray
- 2-d: Document output tray
- 2-e: Document stopper

3: USB HOST port

4: Tray 1 (Manual feed tray)

5: Tray 2

6: Output tray

7: Scanner lock lever

8: Original glass

9: Original cover pad

10: Scanner unit

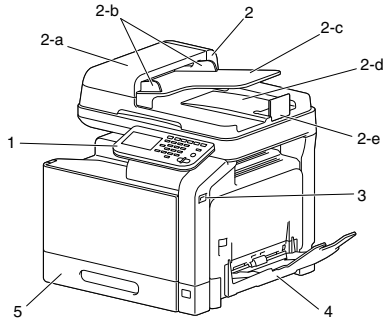

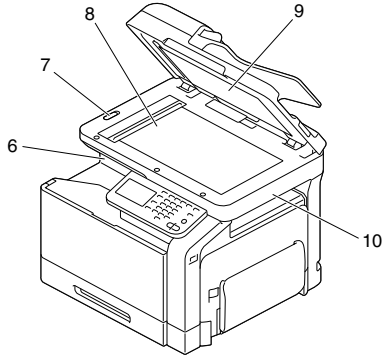

Rear View

1: Power switch

2: Rear cover

3: Power connection

4: LINE (telephone line) jack

5: TEL (telephone) jack

6: 10Base-T/100Base-TX/ 1000Base-T (IEEE 802.3) Ethernet interface port

7: USB port

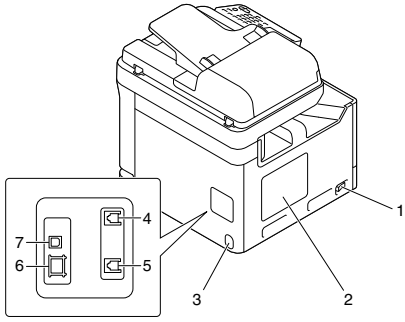

About the Control Panel

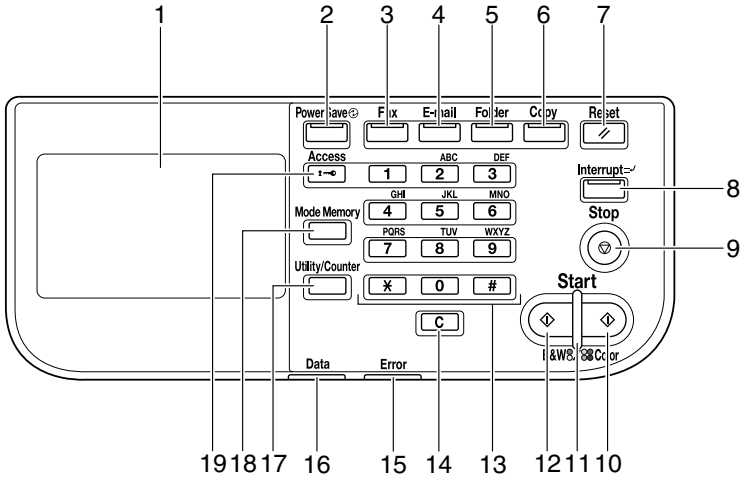

No.	Name	Function
1	Touch panel	Displays various screens and messages. Specify the various settings by directly touching the panel.
2	[Power Save] key/ indicator	Press to enter Power Save mode. While the machine is in Power Save mode, the indicator on the [Power Save] key lights up in green and the touch panel goes off. To cancel Power Save mode, press the [Power Save] key again.
3	[Fax] key/indicator	Press to enter Fax mode. While the machine is in Fax mode, the indicator on the [Fax] key lights up in green.
4	[E-mail] key/indicator	Press to enter Scan to E-mail mode. While the machine is in Scan to E-mail mode, the indicator on the [E-mail] key lights up in green.
5	[Folder] key/indicator	Press to enter Scan to Folder mode. While the machine is in Scan to Folder mode, the indicator on the [Folder] key lights up in green.
6	[Copy] key/indicator	Press to enter Copy mode. While the machine is in Copy mode, the indicator on the [Copy] key lights up in green.

No.	Name	Function
7	[Reset] key	Press to clear the settings (except programmed settings) of all displayed functions.
8	[Interrupt] key/indicator	Press to enter Interrupt mode. While the machine is in Interrupt mode, the indicator on the [Interrupt] key lights up in green. To cancel Interrupt mode, press the [Interrupt] key again.
9	[Stop] key	Pressing the [Stop] key while copying, scanning or printing temporarily stops the operation.
10	[Start (Color)] key	Press to start color copying, scanning or faxing. Press to continue interrupted printing.
11	[Start] indicator	Lights up in blue when copying, scanning or faxing can be performed. Lights up in orange when copying, scanning or faxing cannot be performed.
12	[Start (B&W)] key	Press to start black-and-white copying, scanning or faxing. Press to continue interrupted printing.
13	Keypad	Use to enter the number of copies, a fax number, an e-mail address or a name. Use to type in the various settings.
14	[C] (clear) key	Press to erase numbers or text.
15	[Error] indicator	Flashes in orange if an error occurred. Lights up in orange when the service representative is being called.
16	[Data] indicator	Flashes in blue while a print job is being received. Lights up in blue while printing or when a print job is queued.
17	[Utility/Counter] key	Press to display the [Utility Settings] screen. In the [Utility Settings] screen, settings can be specified for the parameters in the [Accessibility], [Meter Count], [Address Registration], [User Settings] and [Admin Settings] screens.

No.	Name	Function
18	[Mode Memory] key	Press to store the desired settings for copy, fax or scan operations. In addition, stored settings can be recalled.
19	[Access] key	If user authentication or account track settings have been applied, press the [Access] key after entering the user name and password (for user authentication) or the account name and password (for account track) in order to log on to this machine. While logged on, press the [Access] key to log off.

Touch panel

Home screen

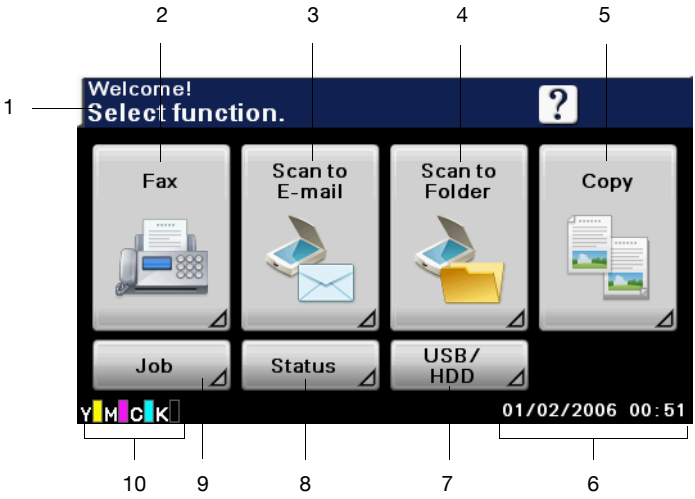

No.	Indication	Description
1	Status	Displays messages about the current operating status.
2	[Fax]	Press to enter Fax mode.
3	[Scan to E-mail]	Press to enter Scan to E-mail mode. For details, refer to the [Printer/Copier/Scanner User's Guide].
4	[Scan to Folder]	Press to enter Scan to Folder mode. For details, refer to the [Printer/Copier/Scanner User's Guide].
5	[Copy]	Press to enter Copy mode. For details, refer to the [Printer/Copier/Scanner User's Guide].
6	Date/time	Shows the current date and time.
7	[USB/HDD]	Press to print files on a USB memory device. Press to print a print job saved on hard disk.

No.	Indication	Description
8	[Status]	Press to view information on consumables and devices.
9	[Job]	Press to check a print, transmission, reception or storing job.
10	Toner supply indicators	Shows the amount of toner remaining for yellow (Y), magenta (M), cyan (C) and black (K).

Initial Fax screen

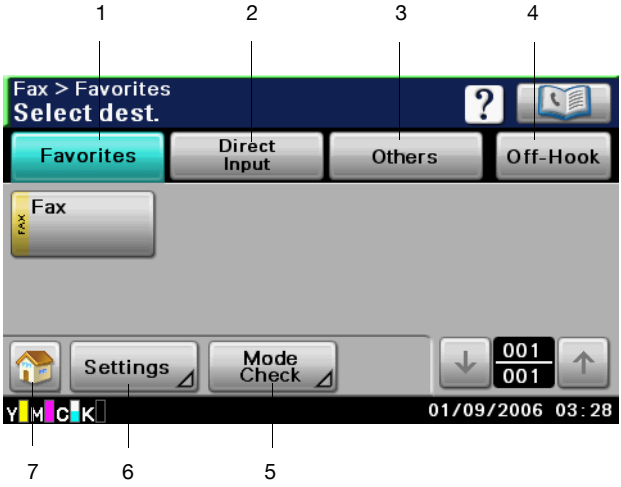

No.	Indication	Description
1	[Favorites]	Press to display frequently used destinations.
2	[Direct Input]	Press to directly enter a destination address.
3	[Others]	Press to select a destination from the log. Documents saved on the machine's memory can also be used.
4	[Off-Hook]	Press to send or receive a fax manually.
5	[Mode Check]	Press to check the currently specified destinations and settings. From this screen, specified destinations can also be deleted.
6	[Settings]	Press to specify fax settings.
7		Press to return to the home screen.

Keys and icons that appear in the screens

Icon	Description
	If the screen has multiple pages, press [↑] or [↓] to select a different page. If values appear between [↑] and [↓], the current page number/total number of pages is indicated.
	If there are tabs that are not displayed, press [←] or [→] to select a different tab.
	Press to adjust the image quality during a copy, scan or fax operation.
	Press [+] or [-] to change the entered value.
	Press when an error occurs to view the error message.
	Press to display descriptions of the various functions. A description of the current screen will be displayed.
	Press to display the address book. From this screen, you can select single destinations and group destinations registered in the address book.
	Appears while scanning and printing when making copies.
	Appears while scanning with fax transmission and scanning operations.
	Appears while printing with PC printing, received fax printing and report printing.

Icon	Description
	Appears when using a G3 fax connection.
	Appears when there are documents queued for a timer transmission.
	Appears when there are fax documents received with memory reception or PC faxing.
	Appears when data or documents are being sent from this unit.
	Appears when this unit is receiving data or documents.
	Appears when enhanced security settings have been applied.
	Appears when a USB memory device is connected.

User authentication and account track

If user authentication or account track settings have been specified on the machine, the user name or account name and the password must be entered in the Login screen in order to log on.

The following procedures describe how to log on when user authentication or account track setting have been specified.

User authentication and account track settings are specified from Web Connection. For details, refer to the [Reference Guide].

With user authentication

Device authentication

1 Specify a name and password for [User Name] and [Password].

- For [User Name], the name can be specified either by directly typing it in or selecting from a list.

2 Press [Login].
If authentication was successful, the functions of this machine can be used.

External server authentication

1 Specify a name and password for [User Name] and [Password].

- For [User Name], the name can be specified either by directly typing it in or selecting from a list.

2 Specify a server for [Server].

3 Press [Login].
If authentication was successful, the functions of this machine can be used.

If account track settings have been applied, account track will be performed after [Login] is pressed. However, if the machine has been set to synchronize user authentication and account track and an account had been specified for the user who is logging on, account track will not be performed. For details, refer to the [Reference Guide].

With account track

1 Specify an account and password for [Account] and [Password].

2 Press [Login].
If authentication was successful, the functions of this machine can be used.

Initial settings

After installation, settings must be specified for the following in order to use the fax functions. Be sure to specify these settings correctly, otherwise fax transmissions cannot be performed.

G3 fax settings

[Date & Time Settings]

Specify the current date and time.

For details on the settings, refer to the [Printer/Copier/Scanner User's Guide].

[Fax Target]

Select the country where this machine is installed.

For details on the settings, refer to "[Fax Target]" on page 2-20.

[Sender Settings]

Specify the name and fax number of the sender (this machine).

For details on the settings, refer to "[Sender Settings]" on page 2-8.

[Comm. Settings]

Specify settings for the fax operating environment, such as the dialing method and reception mode.

For details on the settings, refer to "[Comm. Settings]" on page 2-10.

Internet fax settings

Settings for using Internet fax functions are specified from Web Connection. For details on the settings, refer to the [Reference Guide].

[TCP/IP Settings]

Specify the necessary settings in order to use this machine in a TCP/IP network environment.

[Network Fax Functions Settings]

Enable Internet fax functions.

[E-mail TX (SMTP)]

Enable the e-mail (Internet fax) transmission function. In addition, specify the IP address of the SMTP server and the e-mail address of this machine.

When sending Internet faxes, [Binary Division] is always set to [OFF].

[E-mail RX (POP)]

Enable the e-mail (Internet fax) reception function. In addition, specify the address, login name and password for the POP server.

[Subject]

Register a subject for the e-mail (Internet fax).

The subject can also be specified from the control panel before an Internet fax is sent. For details, refer to “Specifying e-mail (Internet fax) settings” on page 3-17.

[Text]

Register the message text for the e-mail (Internet fax).

The message text can also be specified from the control panel before an Internet fax is sent. For details, refer to “Specifying e-mail (Internet fax) settings” on page 3-17.

Useful functions

By registering destinations where faxes are frequently sent, recipients can be recalled allowing a fax to easily be sent.

- Address Book
  Register information of destinations (fax numbers and e-mail addresses, etc.) where data is frequently sent.
- Group
  Register multiple address book destinations together in a group.
- Program
  Register destinations where faxes are frequently sent together with fax settings ([Scan Settings], [Comm. Settings] and [Original Settings] screens).

For details on registering destinations, refer to "Registering destinations" on page 6-1.

Fax Settings screen

2

[Fax Settings] (User Settings)

The parameters available on the [Fax Settings] screen ([User Settings]) are described below.

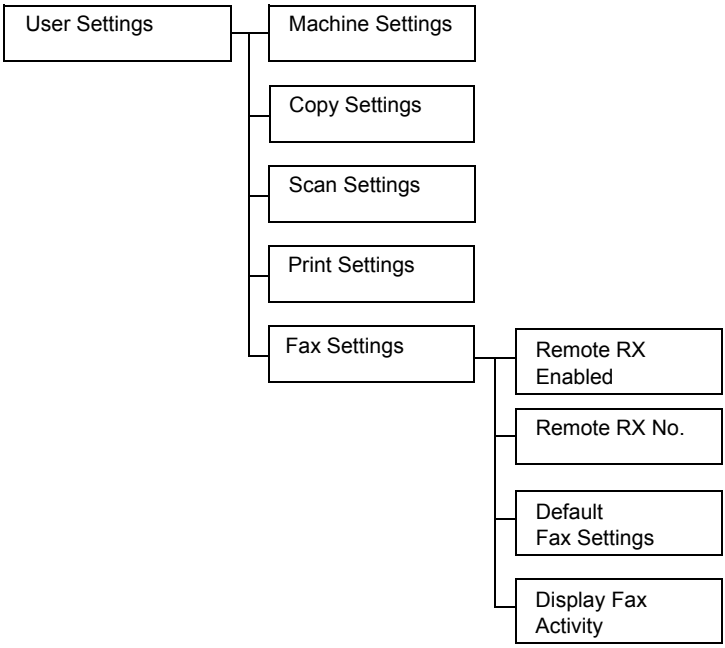

Settings

1 Press the [Utility/Counter] key.
2 Press [User Settings].
3 Press [Fax Settings].
The Fax Settings screen appears.

All factory default values are shown in bold.

Item	Description	
[Remote RX Enabled]	Settings	[ON] / **[OFF]**
	Select whether or not the remote reception function is used.	
[Remote RX No.]	Type in the number (2 digits) for performing remote reception.	

Item		Description	
[Default Fax Settings]		Settings	**[Factory Default]** / [Current Setting]
		Select the default settings for the parameters on the [Scan Settings], [Comm. Settings] and [Original Settings] screens that are selected when the machine is turned on or the [Reset] key is pressed. [Factory Default]: The default settings are the manufacturer's default settings. [Current Setting]: The default settings are the current settings.	
[Display Fax Activity]		Select whether or not transmission/reception information is displayed in the control panel while sending/receiving G3 faxes.	
	[Fax TX]	Settings	[ON] / **[OFF]**
		Select whether or not the number of originals, address, ID and number of destinations are displayed while G3 faxes are being sent.	
	[Fax RX]	Settings	[ON] / **[OFF]**
		Select whether or not the number of originals and ID are displayed while G3 faxes are being received.	

[Fax Settings] (Admin Settings)

The parameters available on the [Fax Settings] screen ([Admin Settings]) are described below.

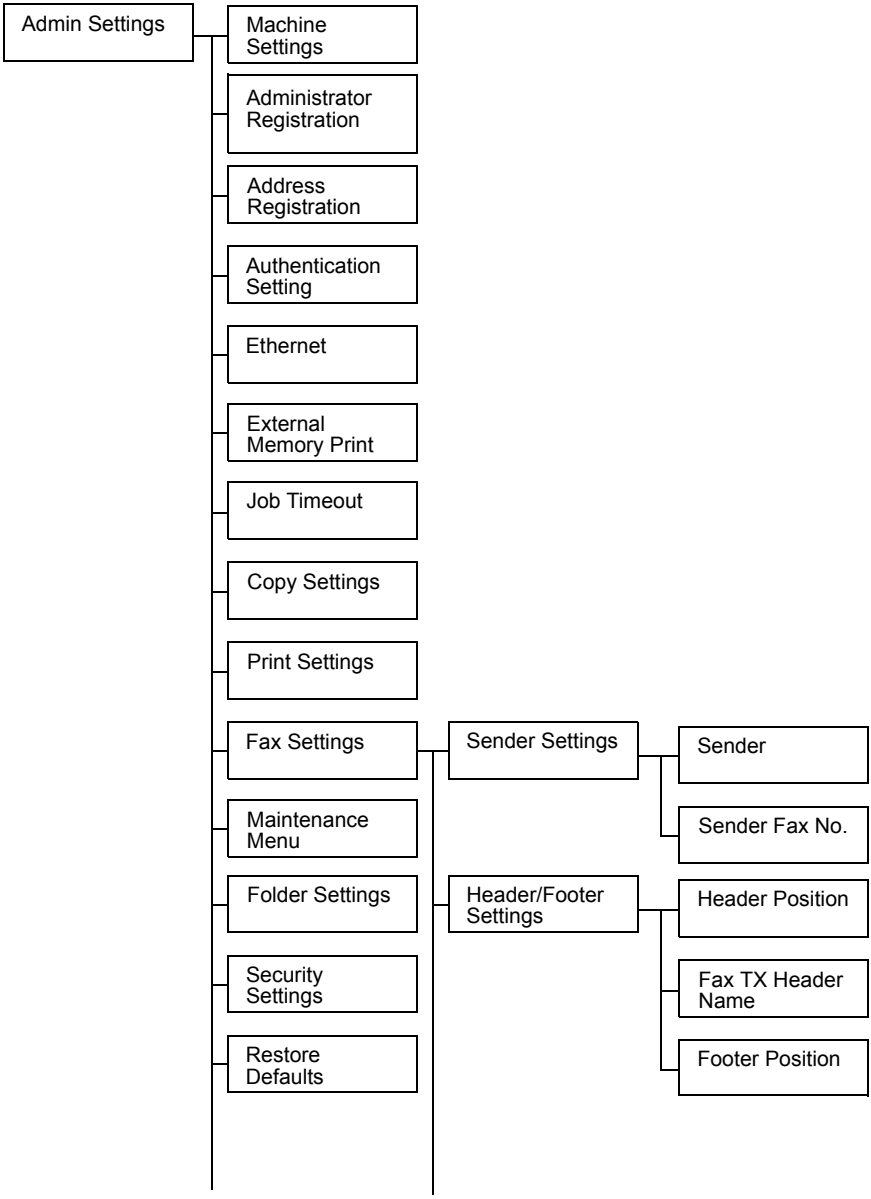

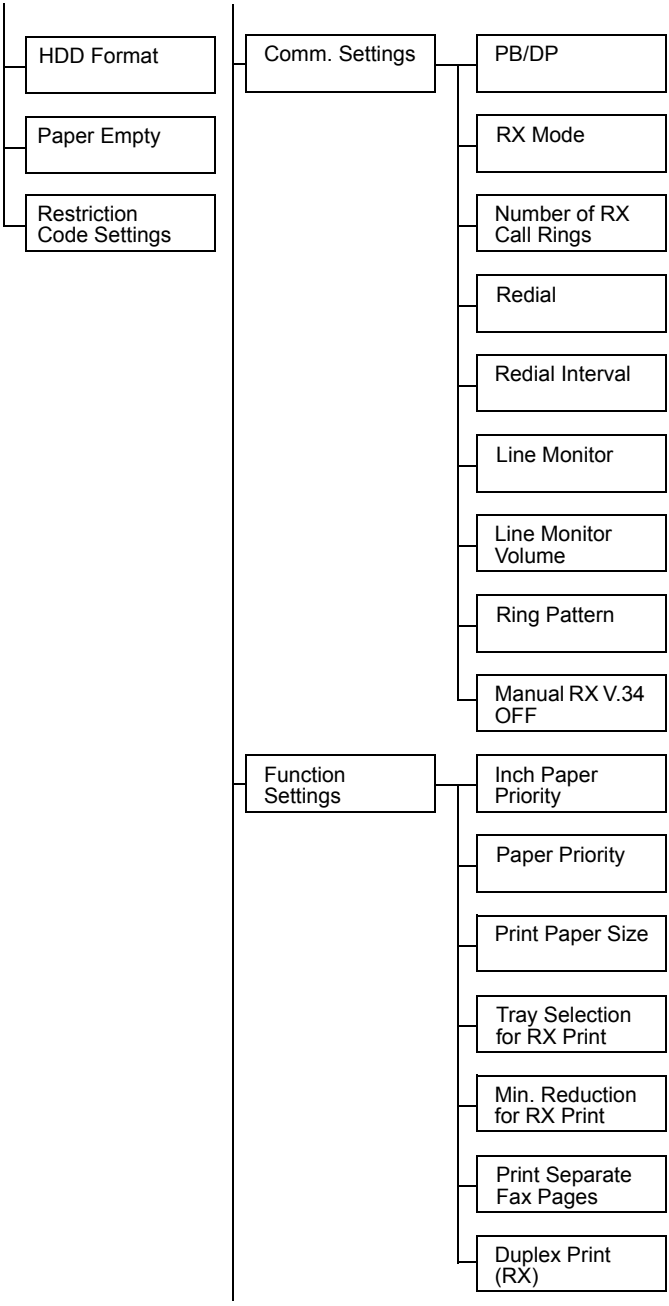
HDD Format
Paper Empty
Restriction Code Settings
Comm. Settings
PB/DP
RX Mode
Number of RX Call Rings
Redial
Redial Interval
Line Monitor
Line Monitor Volume
Ring Pattern
Manual RX V.34 OFF
Function Settings
Inch Paper Priority
Paper Priority
Print Paper Size
Tray Selection for RX Print
Min. Reduction for RX Print
Print Separate Fax Pages
Duplex Print (RX)

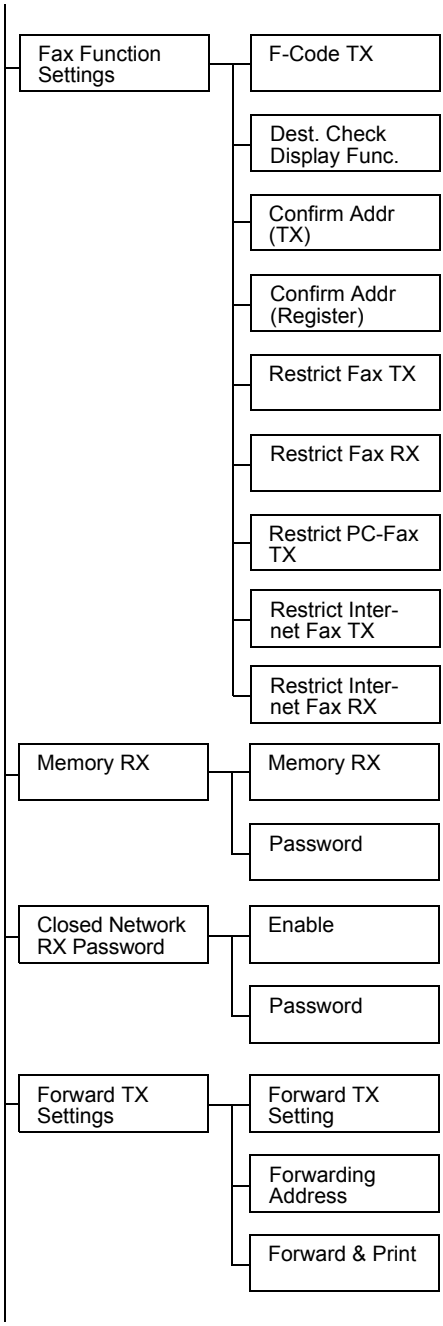
Fax Function Settings
F-Code TX
Dest. Check Display Func.
Confirm Addr (TX)
Confirm Addr (Register)
Restrict Fax TX
Restrict Fax RX
Restrict PC-Fax TX
Restrict Inter-net Fax TX
Restrict Inter-net Fax RX
Memory RX
Memory RX
Password
Closed Network RX Password
Enable
Password
Forward TX Settings
Forward TX Setting
Forwarding Address
Forward & Print

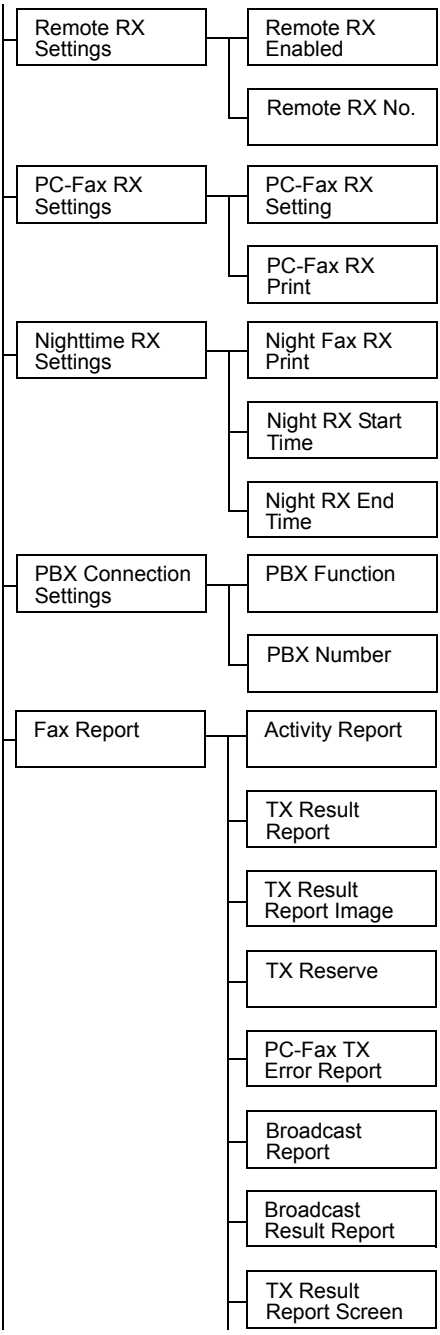
Remote RX Settings
Remote RX Enabled
Remote RX No.
PC-Fax RX Settings
PC-Fax RX Setting
PC-Fax RX Print
Nighttime RX Settings
Night Fax RX Print
Night RX Start Time
Night RX End Time
PBX Connection Settings
PBX Function
PBX Number
Fax Report
Activity Report
TX Result Report
TX Result Report Image
TX Reserve
PC-Fax TX Error Report
Broadcast Report
Broadcast Result Report
TX Result Report Screen

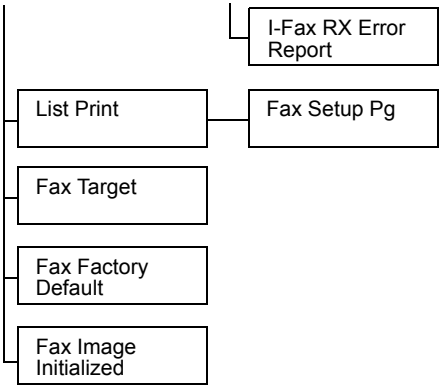

Settings

1 Press the [Utility/Counter] key.

2 Press [Admin Settings].

3 Type in the administrator password (Default: 12345678), and then press [OK].
The Admin Settings screen appears.

4 Press [Fax Settings].
The Fax Settings screen appears.

All factory default values are shown in bold.

[Sender Settings]

Item	Description
[Sender]	Type in the sender's (this machine's) name. (up to 30 bytes) The information specified here is printed as the transmitting subscriber identification in the header of sent documents.
[Sender Fax No.]	Type in the fax number of this machine. (up to 20 characters) The information specified here is printed as the transmitting subscriber identification in the header of sent documents.

[Header/Footer Settings]

Item	Description	
[Header Position]	Settings	[Inside Body Text] / **[Outside Body Text]** / [OFF]
	Select the position for the transmitting subscriber identification added to documents sent from this machine. The added transmitting subscriber identification is printed as a part of the image in the received document. If [OFF] is selected, the transmitting subscriber information is not added. (For 120V model, [OFF] is not available.) *When transmitting subscriber identification is added while sending Internet faxes, the information is added inside the document regardless of the selected setting.*	
[Fax TX Header Name]	Settings	**[ON]** / [OFF]
	Select the information added as the transmitting subscriber identification. [ON]: Adds the sender's name, recipient's fax number (To: xxxxx), date/time that transmission begins, communication number and page number/total number of pages as the transmitting subscriber identification. [OFF]: Adds the sender's name, sender's fax number, date/time that transmission begins, communication number and page number/total number of pages as the transmitting subscriber identification. *The recipient's address will not be added when sending Internet faxes, even if [ON] is selected.*	

Item	Description	
[Footer Position]	Settings	[Inside Body Text] / [Outside Body Text] / **[RX Ft. OFF]**
	Select the position for the reception information (reception time and reception number) printed in documents received by this machine. If [RX Ft. OFF] is selected, the reception information is not printed.	

[Comm. Settings]

Item	Description	
[PB/DP]	Settings	**[PB]** / [10pps] / [20pps]
	Select the dialing method according to the operating environment being used. *The default setting differs depending on the setting selected for [Admin Settings] - [Fax Settings] - [Fax Target]. If [Fax Target] is set to a country that is not compatible with [20pps], [20pps] does not appear.*	
[RX Mode]	Settings	**[Auto RX]** / [Manual RX] / [DRPD]
	Select the reception method. [Auto RX]: Automatic reception [Manual RX]: Manual reception; Select this setting if an external telephone is connected and the phone line is often busy, or if remote reception is to be used. [DRPD]: If the receiver rings with the pattern selected from the four ring patterns available, the incoming call is automatically received as a fax. If [DRPD] is selected, select the ring pattern for faxing with [Ring Pattern].	
[Number of RX Call Rings]	Settings	[1] - [15] (**[2]**)
	Specify how many rings are produced until the machine begins receiving the fax when it is set for automatic reception. *The available settings and the default setting differ depending on the setting selected for [Admin Settings] - [Fax Settings] - [Fax Target].*	

Item	Description	
[Redial]	Settings	[0] - [10] (**[1]**)
	Specify the number of times this machine automatically redials when a fax could not be sent correctly, for example, if the line is busy or a communication error occurred. *The available settings and the default setting differ depending on the setting selected for [Admin Settings] - [Fax Settings] - [Fax Target].*	
[Redial Interval]	Settings	[2] - [15] (**[2]**)
	Select the length of the interval (in minutes) between redial attempts when the machine automatically redials. *The available settings and the default setting differ depending on the setting selected for [Admin Settings] - [Fax Settings] - [Fax Target].*	
[Line Monitor]	Settings	**[OFF]** / [Until Connection Complete] / [Until Transmission Complete]
	Select whether the line monitoring tone is produced during communication. [OFF]: No line monitoring tone is produced. [Until Connection Complete]: The line monitoring tone is produced until the connection with the destination has been completed after dialing. [Until Transmission Complete]: The line monitoring tone is produced until the fax transmission has been completed after dialing.	
[Line Monitor Volume]	Settings	**[Low]** / [Medium] / [High]
	Select the volume of the line monitoring tone.	
[Ring Pattern]	Settings	[Normal Ring] / **[Double]** / [Triple 1] / [Triple 2]
	Select the ring pattern for faxing when [RX Mode] is set to [DRPD]. *For details on the settings, refer to "[Ring Pattern]" on page 4-4.*	

Item	Description	
[Manual RX V.34 OFF]	Settings	[Yes] / **[No]**
	Select whether or not V.34 is automatically turned off during manual reception.	

[Function Settings]

Item	Description	
[Inch Paper Priority]	Settings	**[ON]** / **[OFF]**
	Select whether or not paper sizes in inches are given priority when printing received documents. *The default setting is [ON] for 120V model, and [OFF] for other models.*	
[Paper Priority]	Settings	**[Auto Select]** / [Fixed Size] / [Size Priority]
	Specify the priority for the paper drawers when printing received documents. [Auto Select]: Selects the paper automatically. [Fixed Size]: Prints only on paper of the specified size. [Size Priority]: Prints on paper with the size given priority. If no paper size has been given priority, paper with the closest size is used for printing.	
[Print Paper Size]	Settings	**[Letter]** / [Legal] / [Oficio] / **[A4]**
	Select the size of paper used for printing received documents. In order for this parameter to be available, [Tray Selection for RX Print] must be set to [Auto]. *The default setting is [Letter] for 120V model, and [A4] for other models.*	

Item	Description	
[Tray Selection for RX Print]	Settings	**[Auto]** / [Tray 1] / [Tray 2] / [Tray 3] / [Tray 4]
	Select the paper drawer to be used when a specific paper drawer is used for printing received documents. *[Tray 3] and [Tray 4] do not appear if the optional lower feeder units have not been installed.*	
[Min. Reduction for RX Print]	Settings	[87%] - **[96%]** / [100%]
	Specify the reduction ratio (%) used for printing received documents.	
[Print Separate Fax Pages]	Settings	[ON] / **[OFF]**
	Select whether or not pages are split when the received document is longer than the standard paper size. When [Duplex Print (RX)] is set to [ON], this parameter does not appear.	
[Duplex Print (RX)]	Settings	[ON] / **[OFF]**
	Select whether or not received documents are printed on both sides of paper. When [Print Separate Fax Pages] is set to [ON], this parameter does not appear.	

[Fax Function Settings]

Item	Description	
[F-Code TX]	Settings	**[ON]** / [OFF]
	Select whether or not F-code transmissions are used.	
[Dest. Check Display Func.]	Settings	[ON] / **[OFF]**
	Select whether or not the list of specified destinations is printed before the fax is sent.	

Item	Description	
[Cofirm Addr (TX)]	Settings	[ON] / **[OFF]**
	Select whether or not the destination address must be entered a second time for confirmation when directly typing in the address. Requiring that the address be entered twice reduces misdirected faxes caused by the address being mistyped.	
[Cofirm Addr (Register)]	Settings	**[ON]** / [OFF]
	Select whether or not the destination address must be entered a second time for confirmation when registering destinations. Requiring that the address be entered twice prevents incorrect programming caused by the address being mistyped.	
[Restrict Fax TX]	Settings	[ON] / **[OFF]**
	Select whether or not to prohibit G3 fax transmissions.	
[Restrict Fax RX]	Settings	[ON] / **[OFF]**
	Select whether or not to prohibit G3 fax receptions.	
[Restrict PC-Fax TX]	Settings	[ON] / **[OFF]**
	Select whether or not to prohibit PC fax transmissions.	
[Restrict Internet Fax TX]	Settings	[ON] / **[OFF]**
	Select whether or not to prohibit transmission of Internet faxes.	
[Restrict Internet Fax RX]	Settings	[ON] / **[OFF]**
	Select whether or not to prohibit reception of Internet faxes.	

[Memory RX]

Item	Description	
[Memory RX]	Settings	[ON] / **[OFF]**
	Select whether or not the memory reception function is used. If [ON] is selected, received documents are saved in the machine's memory and are not automatically printed.	
[Password]	Specify the password (up to 8 digits) for allowing documents saved in the memory to be used.	

The function specified from this screen cannot be used at the same time as a function specified from the [PC-Fax RX Settings], [Forward TX Settings] and [Nighttime RX Settings] screens.

[Closed Network RX Password]

Item	Description	
[Enable]	Settings	[Yes] / **[No]**
	Select whether or not the closed network reception function is used.	
[Password]	Specify the password (4 digits) for allowing the machine to be used with closed network receptions.	

[Forward TX Settings]

Item	Description	
[Forward TX Setting]	Settings	[ON] / **[OFF]**
	Select whether or not the memory reception function is used.	
[Forwarding Address]	Type in the fax number of the forwarding destination. Press to select a registered destination. *A received document can also be forwarded to an e-mail address. To forward documents to an e-mail address, select the forwarding destination from the address book.*	

Item	Description	
[Forward & Print]	Settings	[Forward & Print] / **[Forward & Print (If TX Fails)]**
	Select whether or not this machine also prints the fax when it is forwarded. [Forward & Print]: Normally prints the fax at the same time that is forwarded. [Forward & Print (If TX Fails)]: Prints the fax if forwarding failed.	

The function specified from this screen cannot be used at the same time as a function specified from the [PC-Fax RX Settings], [Memory RX] and [Nighttime RX Settings] screens.

[Remote RX Settings]

Item	Description	
[Remote RX Enabled]	Settings	[ON] **/ [OFF]**
	Select whether or not the remote reception function is used.	
[Remote RX No.]	Type in the remote reception number (2 digits) for performing remote reception.	

[PC-Fax RX Settings]

Item	Description	
[PC-Fax RX Setting]	Settings	[ON] **/ [OFF]**
	Select whether or not the PC fax reception function is used.	
[PC-Fax RX Print]	Settings	[ON] / **[OFF]**
	Select whether or not a PC fax is printed automatically after it is received. However, if the fax is saved with the memory reception function, it is not automatically printed.	

The function specified from this screen cannot be used at the same time as a function specified from the [Forward TX Settings], [Memory RX] and [Nighttime RX Settings] screens.

[Nighttime RX Settings]

Item	Description	
[Night Fax RX Print]	Settings	[ON] / **[OFF]**
	Select whether or not to prohibit printing of documents received during the night.	
[Night RX Start Time]	Specify the start time for the night.	
[Night RX End Time]	Specify the end time for the night.	

The function specified from this screen cannot be used at the same time as a function specified from the [Forward TX Settings], [Memory RX] and [PC-Fax RX Settings] screens.

[PBX Connection Settings]

Item	Description	
[PBX Function]	Settings	[ON] / **[OFF]**
	Select whether or not a PBX line is connected.	
[PBX Number]	Specify the outside line access number. The outside line access number specified here will be dialed before the fax numbers registered with address book destinations and program destinations.	

[Fax Report]

Item		Description	
[Activity Report]		Specify the settings for printing activity reports.	
	[Output Settings]	Settings	**[Every 100 comm.]** / [Every Day] / [100/Daily] / [No]
		Select the conditions for printing. [Every 100 comm.]: Prints after every 100 communication jobs. [Every Day]: Prints at the specified time every day. [100/Daily]: Prints at the specified time every day and after every 100 communication jobs. [No]: Is not printed.	
	[Output Time Setting]	Specify the time for printing the report when [Output Settings] is set to [Every day] or [100/Daily].	
	[Activity Report]	Settings	**[Journal 100]** / [Within 24 Hours]
		Select a setting when [Output Settings] is set to [Every day] or [100/Daily]. [Journal 100]: Prints the information for the 100 most recent communication jobs. [Within 24 Hours]: Prints the information for a maximum 100 communication jobs within the past 24 hours.	
[TX Result Report]		Settings	[Always] / **[If TX Fails]** / [No]
		Select the conditions for printing the transmission results report.	
[TX Result Report Image]		Settings	[ON] / **[OFF]**
		Select whether or not an image of the first page of the document is printed in the transmission results report.	
[TX Reserve]		Settings	**[ON]** / [OFF]
		Select whether or not a report is printed with timer transmissions.	

[PC-Fax TX Error Report]	Settings	**[ON]** / [OFF]
	Select whether or not an error report is printed with PC fax transmissions.	
[Broadcast Report]	Settings	**[ON]** / [OFF]
	Select whether or not a results report is printed with broadcast transmissions.	
[Broadcast Result Report]	Settings	**[All Dest.]** / [Mode Once]
	Select the conditions for printing the results report for broadcast transmissions. [All Dest.]: Prints the report if transmission to all destinations was completed. [Mode Once]: Prints a report for each destination if transmission could not be completed, even after redialing.	
[TX Result Report Screen]	Settings	[ON] / **[OFF]**
	Select whether or not to request confirmation for printing a transmission results report before beginning the transmission.	
[I-Fax RX Error Report]	Settings	**[ON]** / [OFF]
	Select whether or not to print a reception error report when reception of an Internet fax fails.	

[List Print]

Item	**Description**	
[Fax Setup Pg]	Settings	**[Print]** / [Cancel]
	A list of fax-related settings will be printed. To print, press [Print], and then press [OK].	

[Fax Target]

Description	
Settings	**[U.S.A.]** / [Canada] / [Mexico] / [Austria] / [Belgium] / [Denmark] / [Finland] / [France] / [Germany] / [Greece] / [Ireland] / [Italy] / [The Netherlands] / [Norway] / [Poland] / [Portugal] / [Spain] / [Sweden] / [Switzerland] / [The U.K.] / [Russia] / [Argentina] / [Brazil] / [South Africa] / [Australia] / [New Zealand] / [China] / [Hong Kong] / [Malaysia] / [Singapore] / [Korea] / [Taiwan] / [Israel] / [Japan] / [Saudi Arabia] / [Turkey] / [Hungary] / [Slovakia] / [Vietnam] / [The Czech Republic] / [The Philippines] / [Europe]
Select the country where this machine is installed. Select the setting when installing the machine.	

[Fax Factory Default]

Description	
Settings	[Yes] / **[No]**
The fax settings are reset to those specified when the machine was shipped from the manufacturer. To return all settings to their factory default, press [Yes], and then press [OK].	

The address book is not initialized.

[Fax Image Initialized]

Description	
Settings	[Yes] / **[No]**
All saved fax data (jobs) is initialized. To initialize, press [Yes], and then press [OK]. The machine is automatically restarted.	

The address book is not initialized.

Sending faxes

3

General operation

The general procedure for sending G3 faxes and Internet faxes is described below.

1 Press [Fax] or press the [Fax] key to display the initial Fax screen.

- For details on the initial Fax screen, refer to “Initial Fax screen” on page 1-8.

2 Place the document in the ADF or on the original glass.

- For details on loading the original document, refer to “Positioning the original document” on page 3-4.

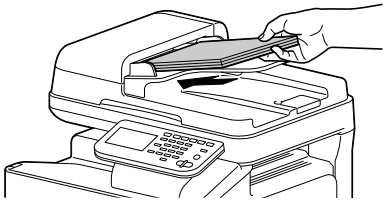

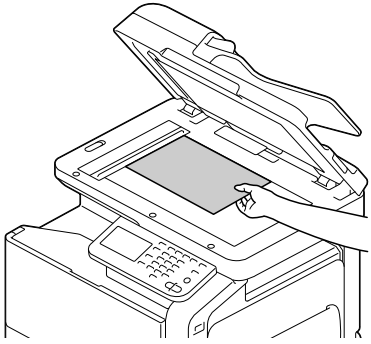

3 Specify the destination.

- For details on specifying destinations, refer to “Specifying destinations” on page 3-7.
- In the initial Fax screen, press [Mode Check] to check or change the specified destinations.

4 Press [Settings], and then select the appropriate settings on the [Scan Settings], [Comm. Settings] and [Original Settings] screens.

- For details on the [Scan Settings] screen, refer to “Specifying scan settings” on page 3-11.
- For details on the [Comm. Settings] screen, refer to “Specifying communication settings (G3 fax)” on page 3-13, “Useful transmission functions (G3 fax)” on page 3-14 and “Specifying e-mail (Internet fax) settings” on page 3-17.

– For details on the [Original Settings] screen, refer to “Specifying document settings” on page 3-18.

5 Press the [Start] key.

– The fax is sent in black and white regardless of whether the [Start (Color)] key or the [Start (B&W)] key is pressed.

After all document pages have been scanned, the fax is sent.

This machine cannot automatically detect the size of an original document that will be scanned. Before scanning the document, specify its size. If the size of the original document is not correctly specified, some parts of the image may be lost. For details on specifying the size of an original document, refer to “[Original Size]” on page 3-18.

If the G3 fax cannot be sent, for example, because the recipient's line is busy, the machine will redial the fax number and try again to send the fax. For details on redialing, refer to “If the fax cannot be sent (automatic redialing) (G3 fax)” on page 3-23.

If the fax could not be sent, a transmission results report is printed (if the machine has been set to print the transmission results report). For details on the transmission results report, refer to “Printing reports/lists” on page 7-4.

To stop a queued G3 fax and Internet fax transmission or a G3 fax transmission queued for redialing, delete the job from the Job screen. For details, refer to “Canceling a queued transmission” on page 3-23.

If the memory becomes full while the document is being scanned, scanning cannot continue. To send the document pages that have already been scanned, press the [Start] key. To stop the transmission, press the [Stop] key.

Internet fax documents will be scanned and sent with the following attributes.
· File type: Monochrome (TIFF)
· Coding method: TIFF-S (MH)

Positioning the original document

With this machine, the document can be placed in the ADF or on the original glass.

Using the ADF

If the ADF is used, documents containing multiple pages can be automatically scanned and faxed. In addition, double-sided documents can also be faxed.

1 Place the document face up in the ADF.

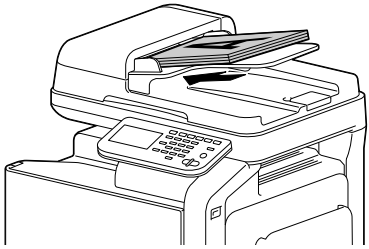

2 Slide the document guides against the edges of the document.

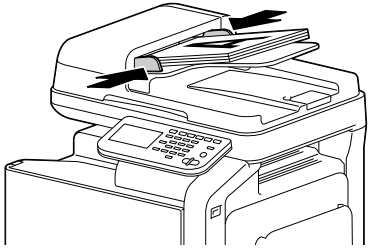

Lower the document stopper when scanning Legal-size paper with the ADF.

If the document contains more pages than can be loaded into the ADF, the document can be divided and scanned separately. For details, refer to "[Separate Scan]" on page 3-11.

A document containing a combination of Letter- and Legal-size pages can be scanned with the ADF. When scanning a document containing a combination of Letter- and Legal-size pages, select "Legal" as the size of the document to be scanned. For details on specifying the size of an original document, refer to "[Original Size]" on page 3-18.

Do not load original documents that are bound together, for example, with paper clips or staples.

Do not load more than 50 sheets; otherwise an original document misfeed or damage to the document or machine may occur.

If the original document is not loaded correctly, it may not be fed in straight, or an original document misfeed or damage to the document may occur.

Do not open the ADF cover while documents loaded into the ADF are being scanned.

Using the original glass

If the original glass is used, documents that cannot be loaded into the ADF (thick documents, such as a book, or a document on thin paper) can be scanned and faxed. With the original glass, only one document page at a time can be scanned.

1 Lift open the ADF.

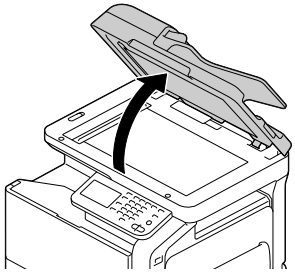

2 Place the document face down on the original glass, aligning the document with the document scales.

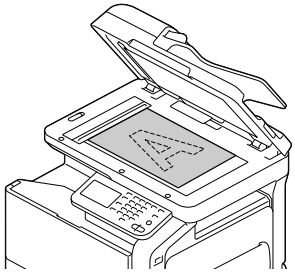

3 Carefully close the ADF.

When using the original glass to scan a document containing multiple pages, the document can be divided and scanned separately. For details, refer to "[Separate Scan]" on page 3-11.

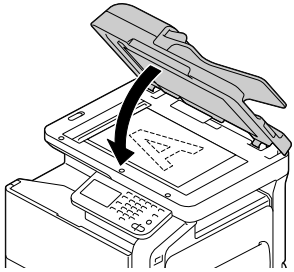

Specifying destinations

Use any of the following methods to specify destinations.

- “Selecting from the registered destinations” on page 3-7
- “Directly typing in the address” on page 3-8
- “Selecting from the log” on page 3-9
- “Selecting with an LDAP search” on page 3-10

Selecting from the registered destinations

An address book destination or group destination can be selected from those previously registered on the machine.

In order to select a registered destination, address book destinations and group destinations must first be registered on the machine. For details, refer to “Registering destinations” on page 6-1.

Selecting from the Favorites list

When destinations are registered, they can be specified as [Favorites].

As a default, the [Favorites] destination list appears when the initial Fax screen is displayed.

Select a destination from the list. To specify multiple destinations for a broadcast transmission, select all destinations where the fax is to be sent.

The setting for the Favorites list can be specified for a destination when it is registered. For details, refer to “Registering destinations” on page 6-1.

Selecting with an index search

Destinations can be selected by searching for the index characters specified when each destination was registered.

1 In the initial Fax screen, press .

2 Press the desired index tab to search the destinations.

- If the desired index tab is not displayed, press [→] or [←] until the desired tab appears.
- To select a group destination, press [Group].

3 Select the destination, and then press [OK].

- To specify multiple destinations for a broadcast transmission, select all destinations where the fax is to be sent.

Selecting by searching for a destination type or name

Destinations can be selected by searching for their type or name.

1 In the initial Fax screen, press .

2 Press [Search].

3 Select the search method.

- [Type]: Select the destination type (Fax, E-mail, etc.).
- [Name]: Directly enter the name of the destination to be searched for. Type in the name to be searched for, and then press [OK] to display a list of the search results.

4 Select the destination, and then press [OK].

- To specify multiple destinations for a broadcast transmission, select all destinations where the fax is to be sent.

5 Press [OK].

Directly typing in the address

To specify a destination that is not registered with the machine, directly type in the address.

If [Admin Settings] - [Security Settings] - [Security Details] - [Direct Input] is set to [Restrict], an address cannot be directly typed in.

G3 fax

1 In the initial Fax screen, press [Direct Input].

2 Press [Fax].

3 Type in the fax number.

- [Tone]: Press to send push-button tones when pulse dialing is being used. [T] appears in the screen.
- [Pause]: Press to insert a pause when dialing. [P] appears in the screen.
- [-]: Press to insert a dash as a separator symbol while dialing. This has no effect on the dialing.

4 Press [OK].

If [Admin Settings] - [Fax Settings] - [Fax Function Settings] - [Cofirm Addr (TX)] is set to [ON], the fax number must be entered again after [OK] is pressed.

To specify multiple destinations for a broadcast transmission, press [Next Dest.] after the fax number was entered, and then type in the next fax number.

If the machine is being used with a PBX, press [Pause] after the outside line access number (for example, [0]) for reliable dialing when transmitting from an inside line to an outside line.

Internet fax

1 In the initial Fax screen, press [Direct Input].
2 Press [Internet Fax].
3 Type in the E-mail address.
4 Press [OK].

To specify multiple destinations, specify all destinations where the data is to be sent.

Selecting from the log

A destination can be selected from the log of the last five transmissions.

1 In the initial Fax screen, press [Others].
2 Press [Log].
3 Select the destination, and then press [OK].

Only addresses that have been directly typed in remain in the log.

Selecting destinations from the log is possible only for jobs with a single destination.

When the machine is turned off, the transmission log is cleared.

If [Admin Settings] - [Fax Settings] - [Fax Function Settings] - [Cofirm Addr (TX)] is set to [ON], a destination cannot be selected from the log.

If [Admin Settings] - [Security Settings] - [Security Details] - [Disable Job History Display] is set to [ON], a destination cannot be selected from the log.

The following types of transmissions are not recorded in the log.
· PC faxing
· Fax forwarding and E-mail forwarding
· Transmissions recovered after the machine is turned off, then on again
· Transmissions where the address is directly typed in while the machine is off-hook

Selecting with an LDAP search

Destinations can be selected after searching an LDAP server. This can be used if the network contains an LDAP server, for example, for user management.

In order to perform an LDAP search, the LDAP server must be registered with the machine. For details, refer to the [Reference Guide].

Internet faxing is not compatible with a destination search of an LDAP server.

1 In the initial Fax screen, press .

2 Press [LDAP].

3 Select the search method, and then perform the search.

- [Search]: Type in the keyword to be searched for. Press [OK] to begin searching.
- [Advanced Search]: Select the appropriate conditions, and then type in the keyword to be searched for. Press [OK] to begin searching.

4 Select the destination, and then press [OK].

- To register an address in the address book, select the address from the address list, and then press [Save].
- To view the details of an address, select the address from the address list, and then press [Details].
- To specify multiple destinations for a broadcast transmission, select all destinations where the fax is to be sent.

Specifying scan settings

From the [Scan Settings] screen, settings for scanning the document can be specified.

[Original Type]

Select the appropriate image quality setting according to your document.

Item	Description
[Text]	Select this setting when scanning documents containing only text.
[Text/Photo]	Select this setting when scanning documents containing a combination of text and photos.
[Photo]	Select this setting when scanning documents containing only photos.

[Resolution]

Select the resolution at which the document is to be scanned.

Item	Description
[Standard]	The document will be scanned at 200 × 100 dpi.
[Fine]	The document will be scanned at 200 × 200 dpi.
[Super Fine] (G3 fax only)	The document will be scanned at 400 × 400 dpi.

A finer scan has more information to be sent, therefore, the transmission time increases.

Only [Standard] and [Fine] are available for sending Internet faxes. If [Super Fine] was selected, the setting will change to [Fine] before the Internet fax is sent.

[Separate Scan]

A document can be divided and scanned separately.

The scan operation can be divided into several sessions, for example, when the document contains more pages than can be loaded into the ADF or when the original glass is being used to scan a document containing multiple pages, and then all scanned pages can be faxed as a single document.

Procedure

1 Press [Fax] or press the [Fax] key to display the initial Fax screen.
2 Place the document in the ADF or on the original glass.
3 Specify the destination.
4 Press [Settings].
5 Press [Scan Settings].
6 Set [Separate Scan] to [ON].
7 Press the [Start] key.
The document is scanned.
8 Load the next batch of document pages, and then press the [Start] key.
- Repeat this operation until all document pages have been scanned.
- Press [Change Settings] to change the scan settings.

9 After all pages of the document have been scanned, press [Finish].

[Density]

Select the density at which the document is to be scanned.

Nine density levels are available. Select the appropriate density setting according to your document.

[Background Removal]

Select the density of the background color at which documents with a background color are to be scanned.

Nine density levels are available for the background color.

[Sharpness]

Select the strength of outlines, for example, on characters and lines, for scanning the document.

To scan characters and lines with greater sharpness, select a setting toward "+". Seven sharpness levels are available.

Specifying communication settings (G3 fax)

With [Line Settings] in the [Comm. Settings] screen, settings for the transmission line can be specified.

[ECM OFF]

The error correction mode (ECM) is turned off when data is being sent.

ECM is an error correction mode defined by ITU-T (International Telecommunication Union - Telecommunication Standardization Sector). Fax machines equipped with the ECM feature communicate with each other while confirming that the sent data is free of errors. Therefore, communication can be free of disturbances caused by telephone line noise, etc. If noise frequently occurs, it may take a slightly longer time to complete a communication, compared with when ECM is turned off. After the transmission has been completed, this machine automatically turns on ECM.

This setting cannot be used together with polling reception.

If [V34 OFF] is set to [No], [ECM OFF] cannot be set to [Yes].

[V34 OFF]

V.34 is a communication mode used with super G3 fax communication. When the remote machine or this machine is connected to a telephone line through a PBX, it may not be possible to establish communication in super G3 mode due to the condition of the telephone line. In this case, it is recommended that V.34 be turned off before sending data. After the transmission has been completed, this machine automatically turns on the V.34 mode.

This setting cannot be used together with polling reception.

[Check Dest. & Send]

The specified fax number is compared with the remote fax number (CSI), and the data is sent only if the fax numbers match. If they do not match, the communication will fail, resulting in a transmission error.

In order to use this function, the recipient s fax number must be specified on their fax machine.

Useful transmission functions (G3 fax)

With [Comm. Method] in the [Comm. Settings] screen, useful transmission functions can be specified.

For details on [Polling RX], refer to "Polling reception (G3 fax)" on page 4-6.

[Timer TX]

A timer transmission can be specified.

Timer transmission is the function for sending a fax at a specified time. Multiple destinations can be specified. A maximum of 16 timer transmissions (including transmissions being redialed) can be queued.

To send a timer transmission, press [Yes], and then use the keypad to type in the transmission time. The time can be set in hours and minutes. The day cannot be specified.

In order to send a timer transmission, the date and time must first be specified on the machine. For details on the date and time settings, refer to the [Printer/Copier/Scanner User's Guide].

This function cannot be used together with Internet fax transmissions or polling reception.

If information was incorrectly entered, press the [C] key to erase the entered information.

If the machine is off at the specified TX Start Time, the fax will be sent the next time that the machine is turned on.

For details on canceling a queued transmission job, refer to "Canceling a queued transmission" on page 3-23.

[Password TX]

A password transmission can be specified.

Password transmission is the function for sending a fax with a password applied. This function can be used if the recipient's fax machine is compatible with closed network receptions.

If the recipient's fax machine is set for closed network receptions, this machine must transmit with the same password as the closed network reception password specified on the recipient's machine.

To send a password transmission, press [Yes], and then use the keypad to type in the closed network reception password specified on the recipient's fax machine.

If information was incorrectly entered, press the [C] key to erase the entered information.

This function cannot be used together with F-code transmissions or polling reception.

[F-Code TX]

An F-code transmission can be specified.

F-code transmissions are the function for sending a fax to a specific recipient's box with a specified Sub address and password.

To send an F-code transmission, press [Yes]. Press [Sub Address] or [Password], and then use the keypad to type in the corresponding settings. The following types of recipient boxes are available.

- Confidential TX
  The fax will be sent to a confidential box on the recipient's machine. Type in the box number for [Sub Address], and type in the communication password for [Password].
- Relay TX
  The fax will be sent to a relay box if the recipient's machine is equipped with a relay transmission function. Type in the relay box number for [Sub Address], and type in the relay password for [Password].

This function can be used if the recipient's fax machine is compatible with F-codes.

Confidential communication is the function for using a confidential box to receive a document to be sent to a specific person. In order to send a confidential transmission from this machine, a confidential box and password must be specified on the recipient's fax machine.

Relay transmission is the function for sending a document to a relay station, which then broadcasts the document to the recipients. In order to send a relay transmission, a relay box number, relay password and destination group number must be specified on the recipient s machine used as a relay station. This machine cannot be used as a relay station.

This function cannot be used together with password transmissions or polling reception.

If information was incorrectly entered, press the [C] key to erase the entered information.

Specifying e-mail (Internet fax) settings

With [E-mail Settings] in the [Comm. Settings] screen, specify the file name, subject, From address and body text for sending Internet fax (e-mail) messages.

Item	Description
[File Name]	Type in the document name for the scan data.
[Subject]	Type in the subject for e-mail messages. Subject text registered with Web Connection can also be selected.
[From]	Specify the sender's address. Select [Administrator E-mail Addr.] or [User Address], or type it in directly. [Administrator E-mail Addr.] can be selected if the administrator e-mail address has been registered. [User Address] can be selected if an e-mail address has been registered for the currently authenticated user.
[Body]	Type in the body text for the e-mail message. Body text registered with Web Connection can also be selected.

For details on registering information from Web Connection, refer to the [Reference Guide].

Specifying document settings

From the [Original Settings] screen, settings can be specified for the document to be faxed.

[Original Size]

Specify the size of the document that is to be faxed.

Item	Description
[Standard Size]	When sending a document of a standard size, press [Standard Size], and then select the document size.
[Custom Size]	Specify the size of the document if it is a non-standard size. Press [X] and [Y], and then type in the document size. [X] can be set between 148 mm and 356 mm (5.83 inches and 14.00 inches); [Y] can be set between 140 mm and 216 mm (5.51 inches and 8.50 inches).

[Long Original]

Select whether or not a long original document is to be sent. A document with a maximum length of 1,000 mm can be sent.

To send a long document, press [ON].

Long documents can only be scanned using the ADF. Double-sided long documents cannot be scanned.

[Simplex/Duplex]

Select whether double-sided documents are to be scanned when the ADF is used.

Item	Description
[1-sided]	Select this setting when scanning a single-sided document.
[2-sided]	Select this setting when scanning a double-sided document.

[Cover + 2-sided]	Select this setting when scanning a double-sided document with a cover page. Only the front side of the first page will be scanned, and then both the front and back sides of the remaining pages will be scanned.

[Binding Position]

Specify the binding position when sending a double-sided document using the ADF. The orientation of the back sides of the pages differs depending on whether the double-sided document will be bound at the top or at the left.

Item	Description
[Left Bind]	Select this setting for binding at the left.
[Top Bind]	Select this setting for binding at the top.
[Auto]	Select this setting to automatically specify the binding position. If the document length is 297 mm (11.69 inches) or less, a binding position along the long side of the paper is selected. If the document length is more than 297 mm (11.69 inches), a binding position along the short side of the paper is selected.

Sending to multiple destinations (broadcast transmissions)

The same document can be sent to multiple destinations with a single operation.

If all of the desired destinations are selected when sending the fax, the same document will be sent to each of the specified destinations. A broadcast transmission can be specified as a timer transmission.

Use any of the following methods to specify destinations for broadcast transmissions.

- Selecting from registered destinations (up to 500 destinations) (page 3-7)
- Directly typing in the address (up to 100 destinations, including the destinations with an LDAP search) (page 3-8)
- Selecting with an LDAP search (up to 100 destinations, including the destinations with direct input) (page 3-10)
- Selecting a group destination (page 3-7)
- Selecting a program destination (page 3-21)

For details on destination types and their registration procedures, refer to “Registering destinations” on page 6-1.

The results of the broadcast transmission can be viewed in the Broadcast Result Report. For details, refer to “Broadcast Result Report” on page 7-9.

When the broadcast transmission destinations include both G3 fax and Internet fax destinations, the document cannot be sent with the [Super Fine] Resolution setting (400 × 400 dpi).

When the broadcast transmission destinations include both G3 fax and Internet fax destinations, the timer transmission function cannot be used.

Internet faxing is not compatible with a destination search of an LDAP server.

Selecting a program destination

A fax can be sent with a program destination registered on the machine.

Program destinations are registered with destinations where faxes are frequently sent together with fax settings ([Scan Settings], [Comm. Settings] and [Original Settings] screens) allowing a fax to easily be sent without the trouble of specifying the various settings.

1 Press [Fax] or press the [Fax] key to display the initial Fax screen.

- For details on the initial Fax screen, refer to “Initial Fax screen” on page 1-8.

2 Position the document to be faxed.

- For details on loading the original document, refer to “Positioning the original document” on page 3-4.

3 Press the [Mode Memory] key.

4 Select the desired program destination from the list, and then press [OK].
The settings and destination addresses are recalled.

5 Press the [Start] key.
The document is scanned and transmission begins.

In order to select a program destination, the program destination must first be registered on the machine. For details, refer to “Registering a program destination” on page 6-6.

When the broadcast transmission destinations include both G3 fax and Internet fax destinations, the document cannot be sent with the [Super Fine] Resolution setting (400 × 400 dpi).

When the broadcast transmission destinations include both G3 fax and Internet fax destinations, the timer transmission function cannot be used.

Faxing manually (G3 fax)

If a fax is sent manually, the status of the recipient can be confirmed before the fax is sent.

In order to send a fax manually, the following requirements must be met.

- The document cannot be divided and scanned separately. If the original glass is being used, the document being sent can contain only one page.
- F-code transmissions, timer transmissions, password transmissions and polling reception are not being performed.
- Automatic redialing cannot be used.
- Multiple destinations cannot be specified.

The procedure for a manual transmission with [Off-Hook] pressed is described below.

If [Admin Settings] - [Fax Settings] - [Fax Function Settings] - [Cofirm Addr (TX)] is set to [ON], [Off-Hook] cannot be used.

1 Press [Fax] or press the [Fax] key to display the initial Fax screen.

- For details on the initial Fax screen, refer to “Initial Fax screen” on page 1-8.

2 Position the document to be faxed.

- For details on loading the original document, refer to “Positioning the original document” on page 3-4.

3 Press [Settings], and then select the appropriate settings on the [Scan Settings], [Comm. Settings] and [Original Settings] screens.

- For details on the [Scan Settings] screen, refer to “Specifying scan settings” on page 3-11.
- For details on the [Comm. Settings] screen, refer to “Specifying communication settings (G3 fax)” on page 3-13 and “Useful transmission functions (G3 fax)” on page 3-14.
- For details on the [Original Settings] screen, refer to “Specifying document settings” on page 3-18.

4 Press [Off-Hook].

5 Make sure that [Send] is selected.

6 Specify the destination.

- Press to select a registered destination.
- Press the [Mode Memory] key to select a program destination.

7 After the fax answer tone is heard, press [Start] or press the [Start] key. The document is scanned and transmission begins.

If the fax cannot be sent (automatic redialing) (G3 fax)

If the fax could not be sent correctly, for example, if the line is busy or a communication error occurred, a message appears, informing that the number will be redialed after a certain length of time. A fax that could not be sent becomes a queued transmission, and the machine automatically redials the number after a certain length of time has passed.

If necessary, the number of redial attempts and the interval between them can be specified. For details, refer to “[Comm. Settings]” on page 2-10.

Automatic redialing cannot be used if the fax is being sent manually.

For details on canceling a transmission being redialed, refer to “Canceling a queued transmission” on page 3-23.

For details on problems that may occur during transmission, refer to “Problems when sending faxes” on page 8-2.

Canceling a queued transmission

To stop a queued G3 fax and Internet fax transmission or a G3 fax transmission queued for redialing, delete the job from the Job screen.

1 In the home screen, press [Job].

– For details on the home screen, refer to “Home screen” on page 1-6.

2 Press [Send].
A list of queued transmission jobs appears.

3 Select the job to be deleted, and then press [Delete].

4 Press [Yes], and then press [OK].
The job is deleted.

For details on the Job screen, refer to the [Printer/Copier/Scanner User's Guide].

Adding the transmitting subscriber identification

The transmitting subscriber identification can be added to documents sent from this machine. This information is printed in the header of the received document as a part of the image.

For details on the settings for specifying where to print the transmitting subscriber identification and for printing the recipient information in the transmitting subscriber identification, refer to "[Header/Footer Settings]" on page 2-9.

G3 fax

The following information can be printed as the transmitting subscriber identification.

- Sender's name
- Fax numbers of the sender or recipient
- Date/time that transmission begins
- Communication number
- Page number/total number of pages

For details on the registering the name and fax number of the sender (this machine), refer to "[Sender Settings]" on page 2-8.

During a manual transmission, the total number of pages is not printed in the transmitting subscriber identification.

Internet fax

The following information can be printed as the transmitting subscriber identification.

- From address of the Internet fax (E-mail)
- Date/time that transmission begins
- Communication number
- Page number/total number of pages

When sending Internet faxes, transmitting subscriber identification is added inside the document.

Receiving faxes 4

Receiving G3 faxes

The following reception modes are available with this machine. Select the one that fits your environment.

- “Automatic reception” on page 4-2
- “Manual reception” on page 4-3
- “DRPD” on page 4-4

When the machine is turned off, faxes cannot be received. Therefore, be sure to leave the machine turned on.

Automatic reception

Select this mode when using the telephone line as a dedicated fax line. When the specified number of rings is detected, fax reception begins automatically.

In order to receive faxes automatically, the following settings in the [Fax Settings] screen ([Admin Settings]) must be specified.

- Set [Comm. Settings] - [RX Mode] to [Auto RX].
- With [Comm. Settings] - [Number of RX Call Rings] to specify how many rings are produced before the machine begins receiving the fax.

For details on the settings, refer to “[Comm. Settings]” on page 2-10.

Manual reception

Select this mode if an external telephone is connected and it is frequently used to make phone calls.

Manual reception can be performed either with the control panel of this machine or with an external telephone.

In order to receive faxes manually, the following settings in the [Fax Settings] screen ([Admin Settings]) must be specified.

- Set [Comm. Settings] - [RX Mode] to [Manual RX].
- With [Comm. Settings] - [Manual RX V.34 OFF], specify that V.34 is automatically turned off during manual reception.

For details on the settings, refer to "[Comm. Settings]" on page 2-10.

With the control panel

The procedure for manually receiving a fax from the control panel is described below.

1 When the external telephone rings, press [Off-Hook] in the initial Fax screen.

2 Press [Receive].

3 Press [Start] or press the [Start] key.
The machine starts receiving the fax.

With an external telephone

For details on the procedure using the external telephone, refer to "Remote reception (G3 fax)" on page 4-9.

DRPD

Select this mode when using DRPD (Distinctive Ring Pattern Detection).

If the receiver rings with the pattern selected from the four ring patterns available, the incoming call is automatically received as a fax.

In order to use DRPD, the following settings in the [Fax Settings] screen ([Admin Settings]) must be specified.

- Set [Comm. Settings] - [RX Mode] to [DRPD].
- With [Comm. Settings] - [Ring Pattern], select the ring pattern for faxing.

For details on the settings, refer to "[Comm. Settings]" on page 2-10.

[Ring Pattern]

Refer to the following table and select the ring pattern.

Settings	Ring Pattern
[Normal Ring]	L-ON + L-OFF
[Double]	L-ON + S-OFF + L-ON + L-OFF
[Triple 1]	S-ON + S-OFF + L-ON + S-OFF + S-ON + L-OFF
[Triple 2]	S-ON + S-OFF + S-ON + S-OFF + L-ON + L-OFF

S-ON (Short-ON): On for 150 ms to 600 ms

L-ON (Long-ON): On for more than 600 ms

S-OFF (Short-OFF): Off for 100 ms to 1,200 ms

L-OFF (Long-OFF): Off for more than 1,200 ms

Receiving Internet faxes

Settings for receiving Internet faxes (e-mail) must first be specified from the [E-mail RX (POP)] page of Web Connection. For details of the settings on the [E-mail RX (POP)] page, refer to the [Reference Guide].

This machine connects to the POP server at a fixed interval to check if an Internet fax has arrived. If an Internet fax has been received, the attached file will automatically be printed.

If data is received with a resolution not supported by this machine, a reception error occurs. For the resolution of data that can be received by this machine, refer to "Technical specifications" on page A-2.

The subject and body text of received Internet faxes are not printed.

If the memory reception or PC fax reception function is being used, the data for a received Internet fax is saved in the memory. For details on using data saved in the memory, refer to "Memory reception (G3 fax/ Internet fax)" on page 4-7 or "Receiving a PC fax" on page 5-18.

Settings can be specified for printing a reception error report when reception of an Internet fax fails. For details on the report, refer to "Printing reports/lists" on page 7-4.

Useful reception functions

The various useful reception functions available with this machine are described below.

Polling reception (G3 fax)

Polling reception is the function where a document queued for polling transmission by the sender or a document saved on the sender's bulletin board is sent with a command from the recipient. This is useful when the recipient is to incur the cost of the call.

Polling reception can be performed to receive a normal fax or to receive a fax by specifying the sender's bulletin board.

This function cannot be used together with ECM OFF, V34 OFF, password transmissions, timer transmissions, F-code transmissions or Internet fax transmissions.

Multiple destinations cannot be specified.

Performing a polling reception

The procedure for using polling reception is described below.

1 Press [Fax] or press the [Fax] key to display the initial Fax screen.

2 Specify the destination.

3 Press [Settings].

4 Press [Comm. Settings].

5 Press [Comm. Method].

6 Press [Polling RX].

7 Press [Yes], and then select the reception method.

- To perform normal polling reception, press [Polling RX].
- To specify a sender's bulletin board for polling reception, press [Bulletin], and then use the keypad to type in the sender's bulletin board number.
- If information was incorrectly entered, press the [C] key to erase the entered information.

8 Press [OK].

9 Press the [Start] key.
Polling reception begins.

Memory reception (G3 fax/Internet fax)

Memory reception is the function for saving received documents in the machine's memory. Documents saved in the memory can be printed or retrieved.

In order to use memory reception, the following settings in the [Fax Settings] screen ([Admin Settings]) must be specified.

- Set [Memory RX] - [Memory RX] to [ON].
- With [Memory RX] - [Password], specify the password for allowing documents saved in the memory to be used.

For details on the settings, refer to "[Memory RX]" on page 2-15.

This function cannot be used together with PC fax reception, fax forwarding, E-mail forwarding or night reception.

Using received documents

The procedure for using a document saved in the memory is described below.

1 Press [Fax] or press the [Fax] key to display the initial Fax screen.

2 Press [Others].

3 Press [Memory RX].

4 Type in the password, and then press [OK].
The list of documents saved in the memory is displayed.

5 Select the document to be printed, and then press [Print].

– To delete the selected document, press [Delete].

The document is printed.

Received documents can be retrieved by using Web Connection. For details, refer to the [Reference Guide].

Closed network reception (G3 fax)

Closed network reception is the function for accepting only transmissions from sender's machines with a matching password.

This function can only be used if the sender's fax machine is equipped with a password transmission function. If this machine is set for closed network receptions, the sender's fax machine must transmit with the same password as the closed network reception password specified on this machine.

In order to use closed network reception, the following settings in the [Fax Settings] screen ([Admin Settings]) must be specified.

- Set [Closed Network RX Password] - [Enable] to [Yes].
- With [Closed Network RX Password] - [Password], specify the password for allowing the machine to be used with closed network receptions.

For details on the settings, refer to "[Closed Network RX Password]" on page 2-15.

Fax forwarding (G3 fax/Internet fax)

Fax forwarding is the function for forwarding received documents to the previously specified destination.

In order to use fax forwarding, the following settings in the [Fax Settings] screen ([Admin Settings]) must be specified.

- Set [Forward TX Settings] - [Forward TX Setting] to [ON].
- With [Forward TX Settings] - [Forwarding Address], specify the fax number of the forwarding destination.
- With [Forward TX Settings] - [Forward & Print], select whether or not this machine also prints the fax when it is forwarded.

For details on the settings, refer to "[Forward TX Settings]" on page 2-15.

An Internet fax destination cannot be specified as the forwarding destination.

If a document with a resolution of 300 × 300 dpi is received as an Internet fax, this machine prints the document without forwarding it.

This function cannot be used together with PC fax reception, memory reception or night reception.

E-mail forwarding (G3 fax/Internet fax)

E-mail forwarding is the function for forwarding received documents to the previously specified destination.

In order to use e-mail forwarding, the following settings in the [Fax Settings] screen ([Admin Settings]) must be specified.

- Set [Forward TX Settings] - [Forward TX Setting] to [ON].
- With [Forward TX Settings] - [Forwarding Address], press , and then specify the e-mail address of the forwarding destination.

- With [Forward TX Settings] - [Forward & Print], select whether or not this machine also prints the fax when it is forwarded.

For details on the settings, refer to "[Forward TX Settings]" on page 2-15.

This function cannot be used together with PC fax reception, memory reception or night reception.

Remote reception (G3 fax)

Remote reception is the function for giving this machine the command to receive a fax by entering a remote reception number from an external telephone.

In order to use remote reception, the following settings in the [Fax Settings] screen ([Admin Settings]) must be specified.

- Set [Comm. Settings] - [RX Mode] to [Manual RX].
- Set [Remote RX Settings] - [Remote RX Enabled] to [Yes].
- With [Remote RX Settings] - [Remote RX No.], specify the remote reception number for giving the command to receive a fax.

For details on the parameters in the [Comm. Settings] screen, refer to "[Comm. Settings]" on page 2-10.

For details on the parameters in the [Remote RX Settings] screen, refer to "[Remote RX Settings]" on page 2-16.

Giving the reception command from an external telephone

The procedure for using remote reception is described below.

1 When the external telephone rings, pick up the receiver, and then check that a fax is being sent.

2 With the external telephone, type in the remote reception number (2 digits).
The machine starts receiving the fax.

3 Replace the telephone receiver.

When using remote reception with pulse dialing, the telephone must be switched to pulse dialing. For details on switching to pulse dialing, refer to the instruction manual for the telephone.

Night reception (G3 fax/Internet fax)

Night reception is the function for prohibiting printing of received documents during the specified night times. Documents received during the time that printing is prohibited are all printed when the machine is finally able to print.

In order to use night reception, the following settings in the [Fax Settings] screen ([Admin Settings]) must be specified.

- Set [Nighttime RX Settings] - [Night Fax RX Print] to [ON].
- With [Nighttime RX Settings] - [Night RX Start Time], specify the start time for the night.
- With [Nighttime RX Settings] - [Night RX End Time], specify the end time for the night.

For details on the settings, refer to "[Nighttime RX Settings]" on page 2-17.

This function cannot be used together with PC fax reception, memory reception, fax forwarding or E-mail forwarding.

Printing received faxes

This section describes how received faxes are printed.

Determining the paper size

The following describes the guidelines for determining the most suitable paper size and the size of paper that will be printed on.

For details on the paper settings for printing received documents, refer to "[Function Settings]" on page 2-12.

Step 1: Determining the most suitable paper size

Based on the following rules, the most suitable paper size is automatically determined from the width and length of the received document.

Width of received document (fixed at A4)	Inch Paper Priority	Footer Position	Length of received document (mm)	Paper size that was determined (most suitable paper size)
A4-width	[OFF]	[RX Ft. OFF] or [Inside Body Text]	1,000 or less	A4
		[Outside Body Text]	1,000 or less	A4
	[ON]	[RX Ft. OFF] or [Inside Body Text]	292 or less	Letter
			293 - 1000	Legal
		[Outside Body Text]	284 or less	Letter
			285 - 1000	Legal

Step 2: Determining the actual paper size used for printing

The machine checks if paper of the most suitable size determined in step 1 is loaded.

- If paper of the most suitable size is loaded, printing begins.
- If paper of the most suitable size is not loaded, or if the Auto Tray Switch function is disabled, the machine checks for paper of the next most suitable size in the order listed in the following table, starting from the top.

Most suitable paper size	A4	Letter	Legal
Order for selecting paper (from top to bottom)	A4	Letter	Legal
		A4	Letter
		Legal	A4

If no paper suitable for printing is loaded in a paper drawer, a message appears, instructing that paper be loaded.

For details on the Auto Tray Switch function, refer to the [Printer/Copier/Scanner User's Guide].

Reducing and splitting

The following four reducing and splitting operations are performed when a received document is printed, depending on the selected settings.

For details on the reducing and splitting settings for printing received documents, refer to "[Function Settings]" on page 2-12.

When [Tray Selection for RX Print] is set to a specific drawer

- If the received document is the same size or is shorter than the paper loaded in the drawer, the image is printed reduced by the specified reduction ratio (between 87% and 96%).
- If the received document is longer than the paper loaded in the drawer, the image is automatically reduced (between 75% and 96%) and printed. If the received document still does not fit within the paper, even after being reduced up to 75%, any part of the image that does not fit within the paper will be lost.
- The pages cannot be split.

When [Min. Reduction for RX Print] is set to [100%]

- The pages cannot be split.
- The image is not reduced.
- [Tray Selection for RX Print] is set to [Auto].
- Received documents are printed at full size on paper that fits the length of the received image minus 20 mm. As a result, up to 20 mm of the trailing edge of the image may be cut off. If the length of the received image is more than 20 mm longer than the paper size, the image is printed on the next larger paper size (most suitable paper size).

When [Print Separate Fax Pages] is set to [OFF]

- The received document is automatically reduced (between 75% and 96%) and printed. If the received document still does not fit within a single page, even after being reduced up to 75%, any part of the image that does not fit within the paper will be lost.
- The image is reduced in both the main scanning direction and the sub-scanning direction while maintaining the original height-to-width ratio.
- If the orientation of the paper to be printed on is different from the orientation of the paper that was automatically selected, the image will not be automatically rotated 90°.

When [Print Separate Fax Pages] is set to [ON]

- The received document is reduced by the specified reduction ratio (between 87% and 96%). If the document does not fit within a single page, the document is split and the remainder is printed on the next page.
- There is no overlapping section on split pages.

Pages are not split when the following settings have been specified, even if [Print Separate Fax Pages] is set to [ON].
·When [Tray Selection for RX Print] is set to a specific drawer for printing
·When [Min. Reduction for RX Print] is set to [100%]
·When [Paper Priority] is set to [Fixed Size] or [Size Priority]
·When [Duplex Print] is set to [ON]

Adding reception information

Reception information can be added to documents received at this machine. This information is printed in the footer of the received document.

The following information can be printed as the reception information.

- Reception date/time
- Communication number
- Page number/total number of pages

For details on the settings for specifying whether or not reception information is printed and where to print the reception information, refer to "[Header/Footer Settings]" on page 2-9.

5 Sending/ receiving a PC fax

Sending a PC fax

Using the fax driver, a G3 fax can be sent from this machine through operations performed on the computer without using any paper.

In order to perform a PC-Fax operation, the fax driver must be installed. For details on installing the driver, refer to the [Installation Guide].

The fax driver is not compatible with IPP (Internet Printing Protocol).

Transmission operation

The procedure for sending a PC fax is described below.

1 Using a computer application, create the data to be sent.

2 On the [File] menu, click [Print].

3 From the [Printer Name] box, select the installed printer (appears with a name such as “xxxxxxx FAX”).

4 If necessary, click [Properties] (or [Preferences]), and then change the fax driver settings.

- For details, refer to “Fax driver settings” on page 5-8.

5 Click [Print].
The [FAX Transmission Popup] dialog box appears.

6 In the [Name] and [FAX Number] boxes, type the appropriate information.

- Up to 80 characters can be entered in the [Name] box.
- Up to 38 characters, including numbers between 0 and 9, hyphens (-), #, *, P, and T, can be entered in the [FAX Number] box. To send a fax overseas, enter the country code at the beginning of the fax number.
- [ECM]: Select this check box to use ECM (error correction mode). If the [V.34 Mode] check box is selected, this check box cannot be cleared.
- [V.34 Mode]: Select this check box to use the super G3 fax transmission mode. Select this check box for ordinary operation; clear this check box only when communication is not possible due to the mode of the recipient’s machine.
- To specify a fax number registered in the address book of this machine, click [Add from Address Book]. For details, refer to “Selecting a recipient from the address book” on page 5-4.
- To specify a fax number registered in the phone book, click [Add From Phone Book]. For details, refer to “Selecting a recipient from the phone book” on page 5-3.

- To add the entered name and fax number to the [Simple Entry] folder of the phone book, click [Register To Phone Book].

7 Click [Add Recipients].

- To send a fax to multiple recipients, repeat steps 6 and 7. Up to 100 recipients can be registered.
- To remove a registered recipient, click [Delete From List].

8 To change the fax mode settings, click [Fax Mode Setting Details]. To specify a fax cover sheet, select the [FAX Cover Sheet] check box.

- For details, refer to “Specifying transmission conditions” on page 5-4 and “Creating a fax cover sheet” on page 5-5.

9 Click [OK].
The fax data is sent via this machine.

Selecting a recipient from the phone book

By clicking [Add From Phone Book] in the [FAX Transmission Popup] dialog box, the recipients of the PC fax can be selected from the phone book.

Before using the phone book, register the name and fax number of the recipient. For details, refer to “Using the phone book” on page 5-15.

1 When sending a fax, click [Add From Phone Book] in the [FAX Transmission Popup] dialog box.

2 Select [Personal List] or [Group] from the list on the left side of the phone book to display the desired recipient under [Personal Information].

- To search for recipients by specifying conditions, click [Find].

3 Select a recipient name under [Personal Information], and then click [Add Recipients].

- To send a fax to multiple recipients, continue adding them in the same way. Up to 100 recipients can be registered.
- To delete a recipient added under [Recipient List], select the name of the recipient to be deleted, and then click [Delete].
- If recipients have been registered as a group, select the name of the group, and then click [Add Recipients]. All members of the group are added under [Recipient List] (broadcast transmission).

4 Click [OK].
The [FAX Transmission Popup] dialog box appears again with the specified names added under [Recipient List].

Selecting a recipient from the address book

By clicking [Add from Address Book] in the [FAX Transmission Popup] dialog box, the recipients of the PC fax can be selected from the address book destinations registered on this machine.

In order to select recipients from the address book of this machine, your computer must be connected to this machine and be able to communicate with it.

Before a recipient can be selected from the address book of this machine, the name and fax number of the recipient must be added to the address book. For details, refer to "Registering destinations" on page 6-1.

1 When sending a fax, click [Add from Address Book] in the [FAX Transmission Popup] dialog box.

2 Select [Address Book List] from the list on the left side of the dialog box to display the desired recipient under [Address Book].

- To start communicating with this machine and read the information from the address book, click [Get Addr. Info].
- To search for recipients by specifying conditions, click [Find].

3 Select the name of a recipient name under [Address Book], and then click [Add Recipients].

- To send a fax to multiple recipients, continue adding them in the same way. Up to 100 recipients can be registered.
- To delete a recipient added under [Recipient List], select the name of the recipient to be deleted, and then click [Delete From List].

4 Click [OK].
The [FAX Transmission Popup] dialog box appears again with the specified names added under [Recipient List].

Specifying transmission conditions

By clicking [Fax Mode Setting Details] in the [FAX Transmission Popup] dialog box, the transmission conditions for the PC fax can be specified.

Item	Description
[Print Recipient File]	Select this check box to print the original document after a fax is sent.
[Timer Send]	Specify the transmission time. Click [Reflect Current Time] to add the current time set on the computer to the [Send Time] box.

Item	Description
[SUB Address]	If the fax is to be sent using F-codes, specify the SUB address. (up to 20 digits)
[Sender ID]	If the fax is to be sent using F-codes, specify the sender ID. (up to 20 digits, including numbers, # and *)

When faxing with a timer transmission, make sure that the time set on the computer matches the time set on this machine. If the specified transmission time is earlier than the current time set on this machine, the fax will be sent on the following day.

Creating a fax cover sheet

By selecting the [FAX Cover Sheet] check box in the [FAX Transmission Popup] dialog box, the PC fax can be sent with a cover sheet attached. In addition, click [Settings] to display the [FAX Cover Sheet Settings] dialog box in order to change the settings for cover sheets.

In the [FAX Cover Sheet Settings] dialog box, change the desired settings by switching between the [Basic], [Recipient], [Sender] and [Image] tabs.

[FAX Cover Sheet Settings] dialog box

Item	Description
[Cover Sheet Settings]	Select a set of cover sheet settings. To change the settings for the selected cover sheet, click [Edit]. To save the selected cover sheet settings so they can be recalled later, click [Add] after specifying the new settings.
[Check]	Click to display an enlarged image of the layout.
[Cover Size]	Specify the size of the cover sheet.
[Basic] tab	Specify settings such as the style and usage conditions.
[Recipient] tab	Specify recipient information.
[Sender] tab	Specify sender information.
[Image] tab	Specify the file for the image added to the cover sheet.

[Basic] tab

Item	Description
[Style]	Select the desired cover sheet design.
[Subject]	Enter the subject of the fax to be sent. (up to 64 characters)
[Date]	Specify the date. Select a specific format, or enter the date as desired. (up to 20 characters)
[Pages]	Specify the number of pages to be sent.
[Comment]	Enter the text that will appear in the comment box. (up to 640 characters) A line break is counted as two characters.

[Recipient] tab

Item		Description
[Standard]		Select this to use the preset text.
[Details]		Select this to specify details under [Recipient Setting Details] at the bottom of the dialog box.
	[Load with Joint Name]	Select this to add the individual recipients in a group destination. The contents of [Recipient List] in the [FAX Transmission Popup] dialog box are added.
	[Change Each Recipient]	Select this to change the information for the recipients. The information for the contents of [Recipient List] in the [FAX Transmission Popup] dialog box are changed.
	[Load Set Information]	Select this to add the information entered in the [Company], [Department], [Name] and [FAX Number] boxes. (up to 80 characters) Click [Read] to import the information for the first recipient into the boxes.

[Sender] tab

Item	Description
[Sender Information Settings]	Enter the appropriate sender information in the [Company], [Department], [Name], [Phone], [FAX Number] and [E-mail] boxes. Select the check boxes for the items to be added, and then type in the text. (up to 80 characters)

[Image] tab

Item	Description
[Paste Image]	To add an image to the cover sheet, select the [Paste Image] check box, and then specify the image file. Only files in the BMP format can be selected.
[Zoom]	Specify the zoom ratio for the added image.
[Position]	In the [X:] and [Y:] boxes, specify the position of the added image.

Fax driver settings

This section describes the settings and buttons common to tabs of the [Printing Preferences] or [Properties] dialog box of the fax driver.

For details on installing the driver, refer to the [Installation Guide].

[Printing Preferences] dialog box

Settings for machine-specific functions can be specified.

To display the [Printing Preferences] dialog box, click [Properties] (or [Preferences]) in the [Print] dialog box, or right-click the printer icon in the [Printers] or [Printers and Faxes] window, then click [Printing Preferences].

Item	Description
[FAX] tab	Specify the transmission conditions for PC faxes. For details, refer to "[FAX] tab" on page 5-10.
[Basic] tab	Specify settings for the paper and original document to be sent. If user authentication or account track settings have been specified on the machine, specify the user or account information. For details, refer to "[Basic] tab" on page 5-11.
[Layout] tab	Specify settings for the page layout. For details, refer to "[Layout] tab" on page 5-12.
[Version Information] tab	View the driver version information.

[Properties] dialog box

Settings concerning the installed options and the default settings for displaying confirmation messages and authentication dialog boxes can be changed.

To display the [Properties] dialog box, right-click the printer icon in the [Printers] or [Printers and Faxes] window, and then click [Properties].

Item	Description
[Configure] tab	Specify settings concerning the installed options. For details, refer to "[Configure] tab" on page 5-13.
[Settings] tab	Change the default settings for displaying confirmation messages and authentication dialog boxes. For details, refer to "[Settings] tab" on page 5-13.

Common Settings

The buttons described below appear on all tabs.

Item	Description
[OK]	Click this button to apply changes to the settings and close the dialog box.
[Cancel]	Click this button to cancel changes to the settings and close the dialog box.
[Help]	Click this button to display the Help for the items in the displayed dialog box.
[Add] (Favorite Setting)	Click this button to save the current settings so they can be recalled later. For details, refer to “Saving fax driver settings” on page 5-14.
[Edit] (Favorite Setting)	Click this button to change the saved settings. For details, refer to “Saving fax driver settings” on page 5-14.
[Default]	Click this button to return the settings to those specified when the driver was installed.
View	Displays a sample page layout based on the current settings so the transmission result image can be checked. Icons for the specified functions appear at the bottom.
[Printer Information]	Click this button to start Web Connection and check the printer information. This button is available only when your computer can communicate with this machine.

[FAX] tab

The settings available on the [FAX] tab are described below.

Item	Description
[Resolution]	Select a resolution for the fax. Selecting a higher resolution may increase the communication time.
[Print Recipient File]	Select this check box to print the original document after a fax is sent. This function can also be specified as a transmission condition when sending a fax. For details, refer to “Specifying transmission conditions” on page 5-4.
[Timer Send]	Specify the transmission time. Click [Reflect Current Time] to add the current time set on the computer to the [Send Time] box. This function can also be specified as a transmission condition when sending a fax. For details, refer to “Specifying transmission conditions” on page 5-4.
[SUB Address]	If the fax is to be sent using F-codes, specify the SUB address. (up to 20 digits) This function can also be specified as a transmission condition when sending a fax. For details, refer to “Specifying transmission conditions” on page 5-4.
[Sender ID]	If the fax is to be sent using F-codes, specify the sender ID. (up to 20 digits, including numbers, # and *) This function can also be specified as a transmission condition when sending a fax. For details, refer to “Specifying transmission conditions” on page 5-4.
[Cover Sheet]	Select this check box to specify cover sheet settings. This can also be specified when sending a fax. For details, refer to “Creating a fax cover sheet” on page 5-5.
[Phone Book Entry]	Click this button to edit the phone book. For details, refer to “Using the phone book” on page 5-15.

When faxing with a timer transmission, make sure that the time set on the computer matches the time set on this machine. If the specified transmission time is earlier than the current time set on this machine, the fax will be sent on the following day.

[Basic] tab

The settings available on the [Basic] tab are described below.

Item	Description
[Original Orientation]	Select the orientation of the original document to be sent.
[Original Size]	Select the paper size of the original document to be sent.
[Paper Size]	Select the size of the paper to be sent. If it is different from the original document size, the output image will be automatically enlarged or reduced.
[Zoom]	Select an enlargement or reduction ratio.
[Authentication/Account Track]	Click this button to specify the user name and password when [User Authentication] has been enabled on this machine, or the account name and password when [Account Track] has been enabled on this machine.

To fax an original document of a custom size, select [Custom Size] from the [Original Size] list. In the [Custom Size Settings] dialog box, specify the length and width of the original document.

If user authentication is not enabled in the [Configure] tab, user authentication will not be performed. If user authentication is being used, be sure to enable it in the [Device Option] list. For details, refer to "[Configure] tab" on page 5-13.

[Authentication/Account Track] dialog box

Item	Description
[User Authentication]	If user authentication settings have been specified on this machine, select [Recipient User], and then specify in the [User Name] and [Password] boxes the settings specified on the machine. (up to 64 characters) If public user access is allowed on this machine, the printer can be used when [Public User] is selected. Server settings must be specified if user authentication is performed with a server. Click [Server Setting], and then select a server.
[Account Track]	If account track settings have been specified on this machine, specify in the [Department Name] and [Password] boxes the settings specified on the machine. (up to 8 characters)

If a fax is sent using a user name and password or account name and password that are not registered on the machine, or if a fax is sent without the [User Authentication] or [Account Track] settings specified in the driver, the fax is deleted without being authenticated by the machine.

Even if the user or account has been registered on the machine, the PC fax may not be sent if use of the fax function is not permitted.

[Layout] tab

The settings available on the [Layout] tab are described below.

Item	Description
[Combination]	Select this check box to combine the pages of a multi-page document into a single sheet, or divide a single document page into multiple sheets when faxing. Click [Combination Details] to specify various details.

Sending documents containing pages of different sizes or orientations in one job may cause some images to be partially lost or to overlap.

[Configure] tab

The settings available on the [Configure] tab are described below.

Item	Description
[Device Option]	Specify the status of the options installed on this machine and user authentication/account track settings. Select the status of each item in the [Setting] box.
[Acquire Device Information]	Click this button to communicate with this machine and read the status of the installed options.
[Acquire Settings]	Click this button to specify the conditions, such as the destination, that are acquired from the device information.

Click [Acquire Device Information] to communicate with this machine and read the machine status. This feature is not available if the computer cannot establish a connection and communicate with this machine.

[Settings] tab

The settings available on the [Settings] tab are described below.

Item	Description
[Display Constraint Message]	Select this check box to display a message when functions that cannot be used together have been enabled from the driver.
[Verify Authentication settings before printing]	Select this check box to verify authentication settings for this machine before printing, and display a message if they do not match.
[Popup Authentication Dialog when printing]	Select this check box to display the [User Authentication/Account Track] dialog box when printing so that the user name and account name can be entered.
[Reconfirm FAX number entered directly]	Select this check box to display a dialog box for entering the fax number again for confirmation when [Add Recipients] is clicked after information has been entered in the [FAX Number] box of the [FAX Transmission Popup] dialog box.

Saving fax driver settings

The settings specified in the [Printing Preferences] dialog box of the fax driver can be saved as favorite settings.

Saved settings can be recalled at any time by selecting them from the [Favorite Setting] list in the [Printing Preferences] dialog box.

Saving the settings

After changing the fax driver settings, click [Add] in the [Favorite Setting] box. Then, specify settings for the following.

Item	Description
[Name]	Enter a name for the settings. (up to 30 characters)
[Icon]	Select an icon. Settings can be saved without an icon selected.
[Sharing]	Select this check box to share the setting file with other users, or clear this check box to register it for private use. Only the administrator can select the [Sharing] check box.
[Comment]	Enter a detailed description of the setting file, if necessary. (up to 255 characters)

Up to 30 shared driver settings and up to 20 private driver settings can be saved.

Editing settings

To edit saved favorite settings, click [Edit] in the [Favorite Setting] box. Select the name of the favorite settings to be edited, and then edit the settings.

To select the items to be recalled when favorite settings are selected, click [Option]. Selected settings are applied to the current settings when the favorite settings are recalled.

The settings for fax driver functions cannot be changed.

To save the favorite settings as a file, click [Export]. To import exported favorite settings into the fax driver, click [Import]. This is useful when using the same settings on a different computer.

Using the phone book

Adding frequently used recipients to a phone book allows you to recall them when sending faxes. Use the [FAX] tab of the fax driver to add recipients to a phone book.

Adding recipients to a phone book

The procedure for adding recipients to the phone book is described below.

1 In the [FAX] tab of the fax driver, click [Phone Book Entry].
The [Phone Book Entry] dialog box appears.

2 Select [Personal List] from the list on the left side of the phone book, and then click [Add New].
The [Personal Information\\Personal List] dialog box appears.

3 In the [Name], [FAX Number], [Company] and [Department] boxes, type the appropriate information.

- When the entered name is printed on the fax cover sheet, a title will not be included. To provide the name with a title on the fax cover sheet, enter the name with a title in the [Name] box.
- Up to 80 characters can be entered in the [Name], [Company] and [Department] boxes.
- Up to 38 characters, including numbers between 0 and 9, hyphens (-), spaces, #, *, P, and T, can be entered in the [FAX Number] box. To send a fax overseas, enter the country code at the beginning of the fax number.
- [ECM]: Select this check box to use ECM (error correction mode). If the [V.34 Mode] check box is selected, this check box cannot be cleared.
- [V.34 Mode]: Select this check box to use the super G3 fax transmission mode. Select this check box for ordinary operation; clear this check box only when communication is not possible due to the mode of the recipient's machine.

4 To add the recipient to groups, select the check boxes for the groups.

- When a recipient is added to a group, a fax can be sent to the recipient by selecting the group as the destination (broadcast transmission). If faxes will frequently be sent to certain destinations, it is useful to add them to a group.
- The recipient can be added to multiple groups.

5 Click [OK].
The personal information is registered and displayed under [Personal List]. If groups have been selected for the recipient, the recipient will appear in the list for those groups.

6 Click [OK].
If recipients have already been added to the phone book, editing of the phone book is finished. If this is the first time that a recipient is being added to the phone book, a dialog box appears, requesting confirmation to save the phone book.

7 Click [Yes].
The [Save As] dialog box appears.

8 Browse to the folder where the file is to be saved, type in the file name, and then click [Save].
The phone book is saved as a new file.

The [Save As] dialog box appears only the first time that a recipient is being added to the phone book. When the phone book is subsequently edited, the [Save As] dialog box does not appear, and the existing file is automatically overwritten.

The saved phone book file automatically appears the next time that the phone book is opened. To open a different phone book file, click the [File] menu in the [Phone Book Entry] dialog box, and then click [Open]. If multiple phone book files have been saved, you can switch between these files to locate the desired one.

To create a new phone book file, click the [File] menu in the [Phone Book Entry] dialog box, and then click [New]. On the [File] menu, click [Save As] to save the file with a different name.

The phone book file is saved with the .csv extension.

Editing a phone book

Editing or organizing a phone book, for example, by changing the registered personal information or group name, enhances its usability.

Changing personal information

Select the name of the recipient to be edited under [Personal List] on the left side of the phone book, and then click [Edit]. The [Personal Information] dialog box appears, which is the same as that for adding a recipient, so that the information can be changed.

To delete a recipient, select the name of the recipient under [Personal List] on the left side of the phone book, and then click [Delete]. At the same time, that recipient is deleted from all groups it belongs to.

Names and fax numbers that have been added using [Register To Phone Book] when sending faxes appear in the [Simple Entry] folder of the phone book.

Changing group membership

Select the name of the recipient to be edited under [Personal List] on the left side of the phone book, and then select or clear the check boxes in the group list on the right.

Up to 100 recipients can be added to a single group.

Changing a group name

Select the group name to be changed under [Group] on the left side of the phone book, click the [Edit] menu, and then click [Rename Group].

Creating a folder

Select [Personal List] on the left side of the phone book, and then click [Add Folder] to create a folder. A folder can also be created by clicking [Add Folder] in the [Edit] menu.

A recipient can be moved from the [Personal List] to the new folder by dragging the name to the folder.

To edit a folder, select the folder to be changed, and then click [Edit].

To delete a folder, select the folder to be deleted, and then click [Delete].

Searching for personal information

Clicking [Find] on the right side of the phone book displays the [Find] dialog box, where various search conditions can be specified.

Receiving a PC fax

When this machine receives a PC fax, the received document is saved in the machine's memory in the TIFF format. Documents saved in the memory can be printed or retrieved.

In order to use PC fax reception, the following settings in the [Fax Settings] screen ([Admin Settings]) must be specified.

- Set [PC-Fax RX Settings] - [PC-Fax RX Setting] to [ON].
- With [PC-Fax RX Settings] - [PC-Fax RX Print], select whether or not a PC fax is printed automatically after it is received.

For details, refer to "[PC-Fax RX Settings]" on page 2-16.

This function cannot be used together with fax forwarding, E-mail forwarding, memory reception or night reception.

If faxes are saved with the memory reception function, a PC fax is not automatically printed after it is received.

Using received documents

The procedure for using a document saved in the memory is described below.

1. Press [Fax] or press the [Fax] key to display the initial Fax screen.
2. Press [Others].
3. Press [Memory RX].
4. Type in the password, and then press [OK].
   The list of documents saved in the memory is displayed.
5. Select the document to be printed, and then press [Print].
   - To delete the selected document, press [Delete].

   The document is printed.

With [Memory RX], specify the password that allows documents saved in the memory to be used. For details, refer to "[Memory RX]" on page 2-15.

Received PC fax documents can be retrieved by using Web Connection. For details, refer to the [Reference Guide].

Uninstalling the fax driver

If the fax driver must be removed, for example, when reinstallation of the driver is necessary, remove the driver using the following procedure.

1 Click [Start], and then click [All Programs] (or [Programs]) - [Color MF30-1] - [xxxxx (model name)] - [Uninstall Printer Driver].

2 Select the components to be removed, and then click [Uninstall]. Continue by following the instructions that appear.

3 If a dialog box appears, instructing you to restart the computer, click [OK].

Registering destinations

6

Destination registration

By registering destinations where faxes are frequently sent, recipients can be recalled allowing a fax to easily be sent. With this machine, address book destinations (Address Book), group destinations (Group) and program destinations (Program) can be registered.

Address Book

The information for destinations where faxes are frequently sent can be registered. A destination can selected from the address book when a fax is being sent. A maximum of 2,000 address book destinations can be registered.

For details on registering, refer to “Registering an address book destination” on page 6-3.

Group

Multiple address book destinations can be registered together as a group. This is useful when sending the same fax to multiple destinations in a broadcast transmission. A maximum of 100 group destinations (with a maximum of 500 address book destinations per group) can be registered.

Group destinations are registered from Web Connection. For details on registering, refer to the [Reference Guide].

Program

Destinations where faxes are frequently sent can be registered together with fax settings ([Scan Settings], [Comm. Settings] and [Original Settings] screens). A registered program destination can be recalled by pressing the [Mode Memory] key in the control panel. A maximum of 400 program destinations can be registered.

For details on registering, refer to “Registering a program destination” on page 6-6.

Registering an address book destination

The procedure for registering an address book destination is described below.

G3 fax

Address book destinations can be registered from the control panel of this machine or from Web Connection. The following procedure describes how to register from the control panel of this machine.

For details on registering from Web Connection, refer to the [Reference Guide].

If [Admin Settings] - [Security Settings] - [Security Details] - [Manual Destination Input] is set to [Restrict], a destination cannot be registered from the control panel and the user mode of Web Connection.

1 Press the [Utility/Counter] key.

2 Press [Address Registration].

3 Press [Fax].

4 Press [New].

- To view the information registered for a destination, select the registered destination, and then press [Details]. To delete the destination, press [Delete] in the Details screen.

5 Enter the information for the destination, and then press [OK].

Settings

Item	Description
[Name]	Type in the registration name for the address book destination.
[Fax number]	Type in the fax number of the recipient. ■ [Tone]: Press to send push-button tones when pulse dialing is being used. [T] appears in the screen. ■ [Pause]: Press to insert a pause when dialing. [P] appears in the screen. ■ [-]: Press to insert a dash as a separator symbol while dialing. This has no effect on the dialing. ■ If the machine is being used with a PBX, press [Outside] when registering an outside destination. [E] appears in the screen. At the point indicated by [E], the outside line access number specified on this machine is automatically dialed. For details, refer to “[PBX Connection Settings]” on page 2-17. ■ If [Admin Settings] - [Fax Settings] - [Fax Function Settings] - [Cofirm Addr (Register)] is set to [ON], the fax number must be entered again after [OK] is pressed.
[Favorites]	For frequently used destinations, set to [ON]. This allows the destination to be found more easily, which is useful when destinations are being selected.
[Index]	Select the search characters that will be used to search for the destination.

Item		Description
[Line Settings]		Configure the line used to send faxes.
	[ECM OFF]	The error correction mode (ECM) is turned off to shorten the transmission time. ECM is an error correction mode defined by ITU-T (International Telecommunication Union Telecommunication Standardization Sector). Fax machines equipped with the ECM feature communicate with each other while confirming that the data sent is free of errors.
	[V34 OFF]	V.34 is a communication mode used with super G3 fax communication. When the remote machine or this machine is connected to a telephone line through a PBX, it may not be possible to establish communication in super G3 mode due to the condition of the telephone line. In this case, it is recommended that V.34 be turned off before sending data. After the transmission has been completed, this machine automatically turns on the V.34 mode.
	[Check Dest. & Send]	The specified fax number is compared with the remote fax number (CSI) and the data is sent only if those fax numbers match. If they do not match, the communication will fail, resulting in a transmission error. To verify the destination and send the fax, the recipient's fax number must be specified on their fax machine.

Internet fax

Internet fax destinations can be registered only from the Web Connection.

For details on registering from Web Connection, refer to the [Reference Guide].

If [Admin Settings] - [Security Settings] - [Security Details] - [Manual Destination Input] is set to [Restrict], a destination cannot be registered from the user mode of Web Connection.

Registering a program destination

The procedure for registering a program destination for fax transmission is described below.

Program destinations can be registered from the control panel of this machine or from Web Connection. The following procedure describes how to register from the control panel of this machine.

For details on registering from Web Connection, refer to the [Reference Guide].

1 Press [Fax] or press the [Fax] key to display the initial Fax screen.

2 Press [Settings], and then select the appropriate settings on the [Scan Settings], [Comm. Settings] and [Original Settings] screens.

- For details on the [Scan Settings] screen, refer to “Specifying scan settings” on page 3-11.
- For details on the [Comm. Settings] screen, refer to “Specifying communication settings (G3 fax)” on page 3-13, “Useful transmission functions (G3 fax)” on page 3-14 and “Specifying e-mail (Internet fax) settings” on page 3-17.
- For details on the [Original Settings] screen, refer to “Specifying document settings” on page 3-18.

3 Press the [Mode Memory] key.

4 Press [Register].

5 At [Name], enter the name.

6 At [Dest.], specify the destination.

- Press , select the address book or group destinations, and then press [OK].

7 Press [OK].

Communication management

7

Checking a job

From the Job screen, the status of transmission/reception jobs and results of jobs can be viewed. In the home screen, press [Job] to display the Job screen.

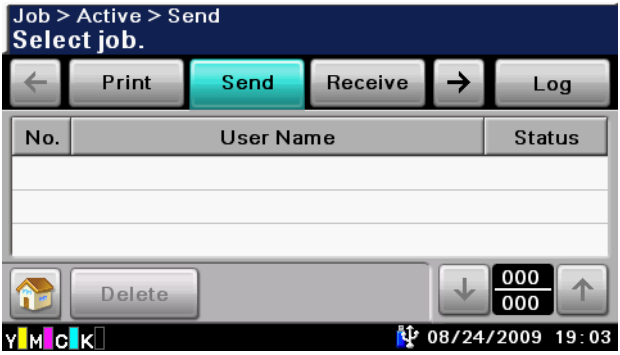

For details on the Job screen, refer to the [Printer/Copier/Scanner User's Guide].

Checking jobs being performed

A list of jobs currently being performed appears when the initial Job screen is displayed. If the job log is displayed, press [Active] to display the list of jobs currently being performed.

Transmission jobs

Press [Send] to view the list of jobs queued for redialing and queued for transmission.

To delete a job, select the job from the list, and then press [Delete].

Reception jobs

Press [Receive] to view the list of jobs being received and queued for reception.

To delete a job, select the job from the list, and then press [Delete].

Checking the job log

Press [Log] in the Job screen to display the job log.

If [Admin Settings] – [Security Settings] – [Security Details] – [Disable Job History Display] is set to [ON], the job log cannot be displayed.

Transmission jobs

Press [Send] to view the log for transmission jobs.

To view job details, select the job from the list, and then press [Details].

*To view an address, select the job from the job log, and then press [Details]. If [Admin Settings] - [Security Settings] - [Security Details] - [Hide Personal Data] is set to [ON], the address is displayed as " ****".*

Reception jobs

Press [Receive] to view the log for reception jobs.

To view job details, select the job from the list, and then press [Details].

Printing reports/lists

This section describes the fax-related reports and lists that can be printed by this machine.

Types of reports

The following types of fax-related reports can be printed by this machine.

Report name	Description
Activity Report	This report provides a record of transmissions and receptions. Results can be viewed of the last 100 transmissions/receptions. Transmission results and reception results are printed separately. If necessary, the conditions for printing can be specified.
TX Result Report	This report provides a record of the transmission results. A reduced image of the sent document is printed on the first page. This report is automatically printed when a fax is sent. If necessary, the conditions for printing can be specified.
Reservation TX Report (G3 fax only)	This report provides a detailed record of timer transmissions. This report is automatically printed when a timer transmission is queued. If necessary, the machine can be set so that this report is not printed.
Broadcast Result Report	This report provides a record of the results of broadcast transmissions. If necessary, the conditions for printing can be specified.
Broadcast Reservation Report (G3 fax only)	This report provides a detailed record of broadcast timer transmissions. This report is automatically printed when a broadcast timer transmission is queued. If necessary, the machine can be set so that this report is not printed.
PC-Fax TX Error Report	This report is printed if an error occurred, preventing a PC fax transmission from being completed correctly.

Report name	Description
I-Fax RX Error Report	This report is printed if reception of an Internet fax failed.

Types of lists

The following types of fax-related lists can be printed by this machine.

List name	Description
Address Book List	This list contains the information registered for address book destinations.
Group List	This list contains the information registered for group destinations.
Program List	This list contains the information registered for program destinations.
Fax Setup Information List	This list contains the fax-related settings that have been specified.

Activity Report

This report provides a record of transmissions and receptions. Results can be viewed of the last 100 transmissions/receptions. Transmission results and reception results are printed separately.

The Activity Report is printed automatically.

With [Admin Settings] - [Fax Settings] - [Fax Report] - [Activity Report], the conditions for printing can be specified. For details, refer to "[Fax Report]" on page 2-18.

Items that are printed

Item	Description
[No.]	Shows the communication number.
[Destination]	Shows the registration name or address of the destination.
[Start Time]	Shows the time that communication began.
[Time]	Shows the length of time required for communication.
[Prints]	Shows the number of pages sent/received.
[Result]	Shows the communication results. For details, check the margin of the report.
[Note]	Shows remarks regarding the communication. For details, check the margin of the report.

TX Result Report

This report provides a record of the transmission results. If necessary, a reduced image of the first page of the sent document can be printed in the report.

The TX Result Report is printed automatically when transmission is completed.

With [Admin Settings] - [Fax Settings] - [Fax Report] - [TX Result Report], the conditions for printing can be specified. For details, refer to "[Fax Report]" on page 2-18.

With [Admin Settings] - [Fax Settings] - [Fax Report] - [TX Result Report Image], whether or not to print a reduced image of the sent document in the TX Result Report can be specified. For details, refer to "[Fax Report]" on page 2-18.

With [Admin Settings] - [Fax Settings] - [Fax Report] - [Confirm TX Result Report], whether or not to print the transmission results report before transmission can be specified. For details, refer to "[Fax Report]" on page 2-18.

Items that are printed

Item	Description
[Destination]	Shows the registration name or address of the destination.
[Start Time]	Shows the time that transmission began.
[Time]	Shows the length of time required for transmission.
[Prints]	Shows the number of pages sent.
[Result]	Shows the results of the transmission. For details, check the margin of the report.
[Note]	Shows remarks regarding the transmission. For details, check the margin of the report.

Reservation TX Report

This report provides a detailed record of timer transmissions.

The Reservation TX Report is printed automatically when a timer transmission is queued.

With [Admin Settings] - [Fax Settings] - [Fax Report] - [TX Reserve], whether or not to print the Reservation TX Report can be specified. For details, refer to "[Fax Report]" on page 2-18.

Items that are printed

Item	Description
[Destination]	Shows the registration name or address of the destination.
[Create Time]	Shows the time that the transmission was queued.
[Start Time]	Shows the time that transmission will begin.
[Prints]	Shows the number of pages that were scanned.
[Note]	Shows remarks regarding the transmission. For details, check the margin of the report.

Broadcast Result Report

This report provides a record of the results of broadcast transmissions.

The Broadcast Result Report is printed automatically when a broadcast transmission is completed.

With [Admin Settings] - [Fax Settings] - [Fax Report] - [Broadcast Report], whether or not to print the Broadcast Result Report can be specified. For details, refer to "[Fax Report]" on page 2-18.

With [Admin Settings] - [Fax Settings] - [Fax Report] - [Broadcast Result Report], the conditions for printing can be specified. For details, refer to "[Fax Report]" on page 2-18.

Items that are printed

Item	Description
[Destination]	Shows the registration name or address of all destinations for the broadcast transmission.
[Start Time]	Shows the time that transmission began.
[Time]	Shows the length of time required for transmission.
[Prints]	Shows the number of pages sent.
[Result]	Shows the results of the transmission. For details, check the margin of the report.
[Note]	Shows remarks regarding the transmission. For details, check the margin of the report.

Broadcast Reservation Report

This report provides a detailed record of broadcast timer transmissions.

The Broadcast Reservation Report is printed automatically when a broadcast timer transmission is queued.

With [Admin Settings] - [Fax Settings] - [Fax Report] - [TX Reserve], whether or not to print the Broadcast Reservation Report can be specified. For details, refer to "[Fax Report]" on page 2-18.

Items that are printed

Item	Description
[Destination]	Shows the registration name or address of all destinations for the broadcast transmission.
[Create Time]	Shows the time that the transmission was queued.
[Start Time]	Shows the time that transmission will begin.
[Prints]	Shows the number of pages that were scanned.
[Note]	Shows remarks regarding the transmission. For details, check the margin of the report.

PC-Fax TX Error Report

This report is printed if an error occurred, preventing a PC fax transmission from being completed correctly.

With [Admin Settings] - [Fax Settings] - [Fax Report] - [PC-Fax TX Error Report], whether or not to print the PC fax transmission error report can be specified. For details, refer to "[Fax Report]" on page 2-18.

Items that are printed

Item	Description
[Destination]	Shows the registration name or fax number of all destinations for the broadcast transmission.
[Create Time]	Shows the time that a PC fax was sent from the computer.
[Start Time]	Shows the time that transmission will begin.
[Cause]	Shows the cause of the error. For details, check the margin of the report.
[Name]	Shows the user name.

I-Fax RX Error Report

This report is printed if reception of an Internet fax failed.

With [Admin Settings] - [Fax Settings] - [Fax Report] - [I-Fax RX Error Report], whether or not to print the I-Fax RX error report can be specified. For details, refer to "[Fax Report]" on page 2-18.

Items that are printed

Item	Description
[From]	Shows the e-mail address of the sender.
[Receiving time]	Shows the time that reception began.
[Cause]	Shows the cause of the reception error.
[Subject]	Shows the subject text.

Address Book List/Group List/Program List

These lists contain the information registered for the various destinations. The procedure for printing a destinations list is described below.

1 Press the [Utility/Counter] key.

2 Press [Admin Settings].

3 Type in the administrator password, and then press [OK].

4 Press [Address Registration].

5 Press [Address Book].

6 Select the list to be printed.

- To print [Address Book] list, continue with step 7.
- To print the [Group] list, continue with step 8.
- To print the [Program] list, continue with step 7.

7 Select the type of destinations to be printed on.

8 If necessary, specify settings for [Start Number] and [Number of Addresses] to limit the number of destinations to be printed.

- With [Start Number], specify the registration number for the first destination to be printed.
- With [Number of Addresses], specify the number of destinations to be printed. The specified number of destinations starting from the registration number specified with [Start Number] will be printed.

9 Press [List Output].

10 Press [Print], and then press [OK].
The destination list is printed.

Fax Setup Information list

This list contains the fax-related settings that have been specified.

For details on printing the settings list, refer to “[List Print]” on page 2-19.

Troubleshooting 8

Problems when sending faxes

For details on the error messages, refer to "Error messages" on page 8-9. For details on troubleshooting procedures for document misfeeds, paper misfeeds, poor print quality, or empty toner, refer to the [Printer/Copier/Scanner User's Guide].

If the fax cannot be sent correctly, refer to the following table, and then perform the indicated operation. If the fax still cannot be sent correctly, even after performing the described operations, contact your technical representative.

G3 fax

Symptom	Cause	Solution
The document is not scanned.	The document is too thick, too thin or too small.	Use the original glass to send the fax.
The document is scanned at an angle.	The document guides are not adjusted to the width of the document.	Slide the document guides to fit the width of the document.
The fax received by the recipient is blurry.	The document is incorrectly positioned.	Position the document correctly.
	The original glass is dirty.	Clean the original glass.
	The text in the document is written too faint.	Adjust the density.
	There may be a problem with the telephone connection.	Check the telephone line, and then try sending the fax again.
	There may be a problem with the recipient's fax machine.	Make a copy to check that this machine is operating correctly, and then, if the copy was printed correctly, have the recipient check the condition of their fax machine.
The fax received by the recipient is blank.	The document was sent with the front side facing down (when the ADF is used).	Load the document to be faxed facing up.

Symptom	Cause	Solution
Transmission is not possible.	The transmission procedure may have been performed incorrectly.	Check the transmission procedure, and then try sending the fax again.
	The fax number may be wrong.	Check the fax number.
	The address book destination, group destination or program destination may have been registered incorrectly.	Check that the destinations were correctly registered.
	The telephone line may be incorrectly connected.	Check the telephone line connection. If it is disconnected, connect it.
	There may be a problem with the recipient's fax machine (such as, no paper or turned off).	Contact the recipient.
	An incorrect telephone line setting may have been selected.	Check that the dialing method setting selected from the [Comm. Settings] screen matches the telephone line being used.
	An incorrect password may have been specified when the transmission was sent with [Password TX] set to [Yes].	Check the password at the receiving end, and then try sending the fax again with the correct password.
	An incorrect password may have been specified when the transmission was sent with [F-Code TX] set to [Yes].	Check the password at the receiving end, and then try sending the fax again with the correct password.
	The recipient's fax number may have been incorrectly specified on their fax machine when the transmission was sent with [TX Confirm CSI] set to [Yes].	Have the recipient check that their fax number is correctly specified on their machine.

Internet fax

Symptom	Cause	Solution
Transmission is not possible.	The network settings are not specified correctly.	Check that the settings in “Initial settings” on page 1-13 have been correctly specified.
	The e-mail address for the destination is incorrect.	Check that the registered destination information is correct.
	The cables are not connected correctly.	Check that the cables are correctly connected.

PC fax

Symptom	Cause	Solution
The message “Printer is not connected” or “Print Error” appears on the computer screen.	The fax driver specified when sending may not be supported by the printer controller.	Check the specified printer name.
	The network or USB cable may be disconnected.	Check that the cable is correctly connected.
	An error may have occurred on this machine.	Check the control panel of this machine.
	Memory may be insufficient.	Check whether a test page can be sent.

Symptom	Cause	Solution
Print processing on the computer finished, but transmission does not start.	The fax driver specified when sending may not be supported by the printer controller.	Check the specified printer name.
	The network or USB cable may be disconnected.	Check that the cable is correctly connected.
	An error may have occurred on this machine.	Check the control panel of this machine.
	Unprocessed jobs may remain queued on this machine.	From the control panel of this machine, check the Job screen for the processing order for the job.
	Account track settings have been specified, but an unregistered account name or password has been entered.	Enter the correct account name and password.
	User authentication settings have been specified, but an unregistered user name or password has been entered.	Enter the correct user name and password.
	The computer may have insufficient memory.	Check whether a test page can be sent.
	A network connection with the printer controller is not established (when connecting via the network).	Contact your administrator.
	This machine may be in enhanced security mode.	Contact your administrator.

Problems when receiving faxes

If the fax cannot be received correctly, refer to the following table, and then perform the indicated operation. If the fax still cannot be received correctly, even after performing the described operations, contact your technical representative.

G3 fax

Symptom	Cause	Solution
The received fax is blank.	There may be a problem with the telephone connection or with the caller's fax machine.	Check that the machine can make clean copies. If it can, have the caller send the fax again.
	The caller may have loaded the pages backward.	Contact the caller.
Reception is not possible.	The machine is set to receive faxes manually.	Set the machine to automatic reception. Otherwise, perform the manual reception operation.
	Memory is full.	Load paper if it is empty, and then print the faxes stored in memory.
	The telephone line is incorrectly connected.	Check the telephone line connection. If it is disconnected, connect it.
	There may be a problem with the caller's fax machine.	Make a copy to check that this machine is operating correctly, and then, if the copy was printed correctly, have the recipient check the condition of their fax machine.
	[Closed Network RX Password] - [Enable] may have been set to [Yes].	If [Closed Network RX Password] - [Enable] is set to [Yes], faxes can only be received from specific senders. For details, contact the administrator.

Symptom	Cause	Solution
Reception is not possible.	The fax may have been sent with an incorrect Sub address for the specified F-code.	If an incorrect Sub address is received, a communication error occurs and the fax cannot be received. Have the sender check the Sub address on their fax machine.
Printing is not possible.	[PC-Fax RX Settings] - [PC-Fax RX Setting] may have been set to [ON].	Print the fax from the machine's memory.
	[Memory RX] - [Memory RX] may have been set to [ON].	Print the fax from the machine's memory.
	[Nighttime RX Settings] - [Night Fax RX Print] may have been set to [ON].	Printing is performed when the specified night time has ended.

Internet fax

Symptom	Cause	Solution
Reception is not possible.	The cables are not connected correctly.	Check that the cables are correctly connected.
	Memory is full.	Load paper if it is empty, and then print the faxes stored in memory.
Printing is not possible.	[PC-Fax RX Settings] - [PC-Fax RX Setting] may have been set to [ON].	Print the fax from the machine's memory.
	[Memory RX] - [Memory RX] may have been set to [ON].	Print the fax from the machine's memory.

Other problems

Symptom	Cause	Solution
The number of document pages indicated in the transmission results report is different from the number of pages in a batch transmission.	Memory is full.	During batch transmissions, the number of document pages indicated in the transmission results report may be different from the number of pages in the transmission if the memory is full.

Error messages

If a machine malfunction occurs, the error screen appears with one of the following error messages. Refer to the following table, and then perform the indicated operation.

If fax transmissions/receptions still cannot be performed correctly, even after performing the described operations, contact your technical representative.

Error message	Cause	Solution
[Off-Hook]	The machine has been left off-hook after a manual transmission.	Put the machine back on-hook.
[Memory Full (Fax)]	The memory is full.	If a fax is being sent, send the scanned document pages. Otherwise, send the fax manually. If a fax is being received, print the received documents saved in the memory.
[Fax TX Failed]	An error occurred while a G3 fax is being sent.	This error is automatically cleared.
[Fax RX Failed]	An error occurred while a G3 fax is being received.	This error is automatically cleared.
[PC-Fax TX Error]	An error occurred while receiving PC-Fax TX data.	This error is automatically cleared.
[Polling RX Error]	Multiple destinations were specified for polling reception.	Multiple destinations cannot be specified for polling reception. Try performing the operation again with only one destination specified.
[PC-Fax Restricted]	A PC fax transmission was requested although PC fax transmissions are prohibited.	For details on specifying PC fax transmission settings, refer to “[Fax Function Settings]” on page 2-13.
[I-Fax TX failed]	An error occurred while an Internet fax is being sent.	This error is automatically cleared.

Error message	Cause	Solution
[I-Fax RX failed]	An error occurred while an Internet fax is being received.	This error is automatically cleared.

Appendix A

Technical specifications

G3 fax

Item	Specifications
Compatible lines	PSTN (Public Switched Telephone Network) PBX (Private Branch eXchange)
Compatibility	ECM/Super G3
Modem speed	2.4 kbps - 33.6 kbps
Fax transmission speed	3 sec/page (at A4, 33.6 kbps, JBIG, V.34)
Coding method	MH, MR, MMR or JBIG
Fax memory	256 MB for G3 fax and Internet fax TX/RX
Maximum scanning size	ADF: 216 mm × 1000 mm Original glass: Legal
Maximum recording size	Legal (Pages with a maximum length of 1,000 mm can be received or printed, depending on the selected page splitting setting.)
Edge erase	4.0 mm (top, bottom, left and right)
Resolution	Standard: 200 × 100 dpi (8 × 3.85 dot/mm) Fine: 200 × 200 dpi (8 × 7.7 dot/mm) Super Fine: 400 × 400 dpi (16 × 15.4 dot/mm) Super Fine (Reception only): 200 × 400 dpi (8 × 15.4 dot/mm)

Internet fax

Item	Description
Protocol	Internet fax (Simple mode), TCP/IP, SMTP, POP3
Fax memory	256 MB for G3 fax and Internet fax TX/RX
File type	Monochrome (TIFF)
Coding method (Transmission)	TIFF-S (MH)
Coding method (Reception)	TIFF-S (MH), TIFF-F (MH/MR/MMR)

Item	Description
Resolution (Transmission)	Standard: 200 × 100 dpi Fine: 200 × 200 dpi
Resolution (Reception)	200 × 100 dpi, 204 × 98 dpi (80 × 38.5 dot/cm) 200 × 200 dpi, 204 × 196 dpi (80 × 77 dot/cm) 300 × 300 dpi 200 × 400 dpi, 204 × 391 dpi (80 × 154 dot/cm) 400 × 400 dpi, 408 × 391 dpi (160 × 154 dot/cm)

PC fax (Fax driver)

Item	Description
Operating system	Windows 2000 Service Pack 4 Windows Server 2003 (32-bit/64-bit) Windows XP (32-bit/64-bit) Windows Vista (32-bit/64-bit) Windows Server 2008 (32-bit/64-bit) Windows Server 2008 R2 Windows 7 (32-bit/64-bit)
CPU	Pentium 3: 400 MHz or higher (Windows Vista: 1 GHz or higher)
Memory	512 MB or more

For details on other specifications, refer to the [Printer/Copier/Scanner User's Guide].

Text input

The procedure for using the keyboard screen is described below.

Entering text

In the keyboard screen, press the character that you want to enter.

- To enter uppercase letters, press [⬆].
- To enter symbols, press [!#?/].
- To enter special characters, such as accented characters, press [äü].
- To delete the character to the right of the cursor, press [Delete].
- To move the cursor, press [<] or [>].

Numbers can also be typed in with the keypad in the control panel.

To clear all entered text, press the [C] key.

Index

A

Account track 1-11, 1-12
Address Book 6-2
Address Registration 6-3
ADF 3-4

C

Canceling 3-23
Closed network reception 4-7
Comm. Method 3-14
F-Code TX 3-15
Password TX 3-15
Timer TX 3-14
Comm. Settings 3-13, 3-14
Control Panel 1-3

D

DRPD 4-4
Ring Pattern 4-4

E

E-mail forwarding 4-8
E-mail Settings 3-17

F

Fax driver 5-8
Authentication/Account Track .. 5-12
Basic 5-11
Configure 5-13
Favorite Setting 5-14
FAX 5-10
Layout 5-12
Printing Preferences 5-8
Properties 5-8
Settings 5-13
Uninstall 5-19
Fax forwarding 4-8
Fax screen 1-8
Fax Settings (Admin Settings) 2-4

Closed Network RX Password ..2-15
Comm. Settngs 2-10
Fax Factory Default 2-20
Fax Function Settings 2-13
Fax Image Initialized 2-20
Fax Report 2-18
Fax Target 2-20
Forward TX Settings 2-15
Function Settings 2-12
Header/Footer Settings 2-9
List Print 2-19
Memory RX 2-15
Nighttime RX Settings 2-17
PBX Connection Settings 2-17
PC-Fax RX Settings 2-16
Remote RX Settings 2-16
Sender Settings 2-8
Fax Settings (User Settings) 2-2
Footer 4-14

G

Group 6-2
Group Address List 7-12

H

Header 3-24
Home screen 1-6

I

Icon 1-9

J

Job 7-2
Active 7-2
Log 7-3

L

Line Settings 3-13
ECM OFF 3-13
TX Confirm CSI 3-13
V34 OFF 3-13
Lists 7-5
Address Book List 7-12
Fax Setup Information List 7-12

M

Machine Parts 1-2
Memory reception 4-7
Mode Memory 3-21

N

Night reception 4-10

O

Off-Hook 3-22
Original glass 3-5
Original Settings 3-18
Binding Position 3-19
Long Original 3-18
Original Size 3-18
Simplex/Duplex 3-18

P

Parts 1-2
PC-Fax 5-2, 5-18
Address book 5-4
FAX Cover Sheet 5-5
Phone book 5-3
Transmission operation 5-2
Phone book 5-15
Polling reception 4-6
Printing received faxes 4-11
Program 6-2
Program Address 6-6
Program Address List 7-12

R

Receiving G3 faxes 4-2
Automatic reception 4-2
DRPD 4-4
Manual reception 4-3
Receiving Internet faxes 4-5
Redial 3-23
Remote reception 4-9
Reports 7-4
Activity Report 7-6

Broadcast Reservation Report ..7-10
Broadcast Result Report 7-9
I-Fax RX Error Report 7-11
PC-Fax TX Error Report 7-11
Reservation TX Report 7-8
TX Result Report 7-7

S

Scan Settings 3-11
Background Removal 3-12
Density 3-12
Original Type 3-11
Resolution 3-11
Separate Scan 3-11
Sharpness 3-12
Sending faxes 3-1
General operation 3-2
Specifications A-2
Specifying destinations 3-7
Direct Input 3-8
Favorites 3-7
LDAP 3-10
Log 3-9
Search 3-8

T

Text input A-4
Touch panel 1-6
Troubleshooting 8-1
Error messages 8-9

U

User authentication 1-11
Device authentication 1-11
External server authentication ..1-11

olivetti

N ° 10-114

DICHIARAZIONE CE DI CONFORMITA' del COSTRUTTORE secondo ISO/IEC 17050
MANUFACTURER'S CE DECLARATION of CONFORMITY according to ISO/IEC 17050

OLIVETTI S.p.A Via Jervis, 77 - IVREA (TO) - ITALY

Dichiara sotto la sua responsabilita' che il prodotto:
Declares under its sole responsibility that the product:

Categoria generale:	**Apparecchiature per la Tecnologia dell' Informazione**
Equipment category:	***Information Technology Equipment***
Tipo di apparecchiatura:	**Multifunzionale Laser Digitale**
Product type:	***Digital Laser Multifunctional***
Modello/*Product name*:	**d-Color MF3000**
Opzioni/*Options:*	**PF-P08, Memory (1024 Mb max)**

è CONFORME alla Direttiva 1999/5/CE del 9 marzo 1999
are in compliance with directive 99/5/EC dated 9th march 1999
e soddisfa i requisiti essenziali di **Compatibilità Elettromagnetica e di Sicurezza** previsti dalle Direttive:
and fulfills the essential requirements of Electromagnetic Compatibility and of Electrical Safety as prescribed by the Directives:

2009/125 del 21 Ottobre 2009; (ErP)
2009/125 dated 21th October 2009;
2004/108/CE del 15 Dicembre 2004; (EMC)
2004/108/EC dated 15th December 2004;
2006/95/CE del 12 Dicembre 2006; (LVD)
2006/95/EC dated 12th December 2006;

in quanto progettato e costruito in conformità alle seguenti Norme Armonizzate:
since designed and manufactured in compliance with the following European Harmonized Standards:

EN 55022:2006 (Limits and methods of measurements of radio interference characteristics of Information Technology Equipment) / Class B;
EN 61000-3-2:2006 (Electromagnetic Compatibility (EMC) - Part 3: Limits - Section 2: Limits for harmonic current emissions (equipment input current ≤ 16 A per phase)
EN 61000-3-3:1995 + A1:2001 + A2:2005 (Electromagnetic Compatibility (EMC) - Part 3: Limits - Section 3: Limitation of voltage fluctuations and flicker in low voltage supply systems for equipment with rated current up to and including 16A);
EN 55024:1998 + A1:2001 + A2:2003 (Electromagnetic Compatibility – Information technology equipment – Immunity characteristics – Limits and methods of measurement);
EN 62311:2008 (Assessment of electronic and electrical equipment related to human exposure restrictions for electromagnetic fields (0 Hz - 300 GHz))
EN 60950-1:2006 + A11:2009 (Safety of Information Technology Equipment, including electrical business equipment.)
EN 60825-1:2007 (Radiation Safety of laser products, equipment classification, requirements and user's guide).
ES 203 021-1: V 2.1.1, ES 203 021-2: V 2.1.2, ES 203 021-3: V 2.1.2 (Referred Voluntary Requirements).
EG 201 120: V 1.1.1, EG 201 121: V 1.1.3, EG 201 187: V 1.1.1 (Referred Voluntary Requirements).
1275/2008/EC

La conformità ai suddetti requisiti essenziali viene attestata mediante l'apposizione della **Marcatura CE** sul prodotto.
*Compliance with the above mentioned essential requirements is shown by affixing the **CE marking** on the product.*

Ivrea, 20 Maggio 2010
Ivrea, 20th May 2010

Walter Fontani
Quality V.P
Olivetti S.p.A.

Note: 1) La Marcatura CE è stata apposta nel 2010
Notes: 1) CE Marking has been affixed in 2010
2) Il Sistema della Qualità è conforme alle norme serie UNI EN ISO 9000.
2) The Quality System is in compliance with the UNI EN ISO 9000 series of Standards