olivetti

Facsimile User's Guide

d-COLORMF2400

Code: 569404en

PUBLICATION ISSUED BY:
Olivetti S.p.A.
Gruppo Telecom Italia

Via Jervis, 77 - 10015 Ivrea (ITALY)
www.olivetti.com

Copyright © 2011, Olivetti
All rights reserved

The mark affixed to the product certifies that the product satisfies the basic quality requirements.

The manufacturer reserves the right to carry out modifications to the product described in this manual at any time and without any notice.

ENERGY STAR is a U.S. registered mark.

The ENERGY STAR program is an energy reduction plan introduced by theUnited States Environmental Protection Agency in response to environmental issues and for the purpose of advancing the development and utilization of more energy efficient office equipment.

Your attention is drawn to the following actions which could compromise the conformity attested to above, as well as the characteristics of the product:

- ∀incorrect electrical power supply;
- ∀incorrect installation, incorrect or improper use or use not in compliance with the warnings provided in the User's Manual supplied with the product;
- ∀replacement of original components or accessories with others of a type not approved by the manufacturer, or performed by unauthorised personnel.

All rights reserved. No part of this material may be reproduced or transmitted in any form or by any means, electronic or mechanical, including photocopying, recording or by any information storage and retrieval system, without permission in writing from the Publisher.

Contents

Thank You x-1
Trademarks x-1
Copyright Notice x-1
Manual Notice x-1

1 Introduction 1-1
Machine Parts 1-2
Front View 1-2
Rear View 1-3

2 Control Panel and Configuration Menu 2-1
About the Control Panel 2-2
Fax Mode Screen 2-5
Main Screen 2-5
Entering Fax Mode 2-8
Symbol list 2-8
UTILITY Menu 2-9
MACHINE SETTING Menu 2-10
ADMIN. MANAGEMENT Menu 2-12
DIAL REGISTER Menu 2-18

FAX TX OPERATION Menu 2-19
FAX RX OPERATION Menu 2-22
REPORTING Menu 2-26
Specifying Settings in UTILITY Menu 2-28
General Procedure for Specifying Settings in UTILITY Menu 2-28
Memory Reception 2-28
Setting Up the Memory RX Mode 2-29
Turning Off the Memory RX Mode 2-30
Specifying Forwarding Settings 2-30

3 Sending Faxes 3-1
Basic Fax Operation 3-2
Sending a Fax Using the ADF 3-2
Sending a Fax Using the Original Glass 3-5
Selecting the Image Quality 3-7
Selecting the Original Quality 3-7
Selecting the Scan Density 3-8
Specifying a Recipient 3-9
Directly Entering a Fax Number 3-9
Using the Favorite List 3-10
Using the Speed Dial Function 3-10
Using the List Function of the Address Book 3-11
Using the Search Function of the Address Book 3-12
Using the Redial Function 3-13
Specifying Multiple Recipients 3-14
Sending a Fax to Multiple Recipients (Broadcast Transmission) 3-14
Sending a Fax to Multiple Recipients (Group Dial) 3-16
Sending a Fax at a Specified Time (Timer Transmission) 3-17
Sending a Batch Transmission 3-19
Memory Transmission and Direct Transmission 3-20
Memory Transmission 3-20
Direct Transmission 3-20
Changing the Transmission Method 3-20
Sending a Fax Manually 3-22
Sending a Fax Manually After Using the Telephone 3-22
Sending a Fax Manually Using the On Hook Key 3-23
Sending a Fax to a Combination of Fax Numbers (Chain Dial) 3-24
Cancelling a Queued Transmission 3-25
About the Fax Header 3-26

4 Faxing From a Computer (PC-FAX) 4-1
Sending a Fax Directly From a Computer (PC-FAX) 4-2
PC-FAX Settings 4-2
Common Buttons 4-2
Settings Tab 4-2
Sender Information Tab 4-2

Address Book Tab 4-3
Displaying PC-FAX Settings 4-4
Windows 7/Server 2008 R2 4-4
Windows Vista/Server 2008 4-4
Windows XP Home Edition 4-4
Windows XP Professional/Server 2003 4-4
Basic PC-FAX Transmissions 4-5
Uninstalling the FAX Driver (for Windows) 4-6

5 Receiving Faxes 5-1
Receiving Faxes Automatically 5-2
Receiving Faxes Manually 5-3
Manual Reception 5-3
Receiving Faxes With an Operation Performed by This Machine (Manual Polling Reception) 5-4
Forwarding Received Faxes 5-4
Printing Received Faxes 5-5
What Is the Guaranteed Imageable (Printable) Area? 5-5
Printing Received Faxes on Both Sides of Paper 5-5
Adding the Sender's Information When Printing Faxes 5-6
Method of printing during reception 5-7
REDUCTION RX: ON 5-7
REDUCTION RX: OFF 5-9
REDUCTION RX: CUT 5-11

6 Registering Recipients 6-1
About the Dial Register Function 6-2
Favorite List 6-3
Registering Destinations in the Favorite List 6-3
Deleting Destinations from the Favorite List 6-4
Speed Dialing 6-5
Registering a Speed Dial Destination 6-5
Changing/Deleting Speed Dial Information 6-7
Group Dialing 6-8
Registering a Group Dial Destination 6-8
Changing/Deleting Group Dial Information 6-10

7 Confirmation Mode 7-1
About the Machine's Counters 7-2
Checking the Counter for Fax Printing 7-2
Checking the Counter for Total Scans 7-2
Checking the Transmission/Reception Result From the Message Window . 7-3
About the Reports and Lists 7-4
Printing the Reports and Lists 7-4
TX RESULT REPORT 7-4

RX RESULT REPORT 7-5
ACTIVITY REPORT 7-5
MEMORY DATA LIST 7-5
MEMORY IMAGE PRINT 7-6
FAVORITE LIST 7-6
SPEED DIAL LIST 7-6
GROUP DIAL LIST 7-6

8 Troubleshooting 8-1
Problems When Sending Faxes 8-2
Problems When Receiving Faxes 8-3
Other Problems 8-4
Error Messages on the Message Window 8-5

9 Appendix 9-1
Technical Specifications 9-2
Entering Text 9-4
Key Operation 9-4
Entering Fax Numbers 9-4
Entering Names 9-5
Entering Email Addresses 9-5
Changing Input Mode 9-6
Inputting Example 9-6
Correcting Text And Input Precautions 9-7

Introduction 1

Machine Parts

The parts of the machine referred to throughout this manual are illustrated below. Please take some time to become familiar with them.

Front View

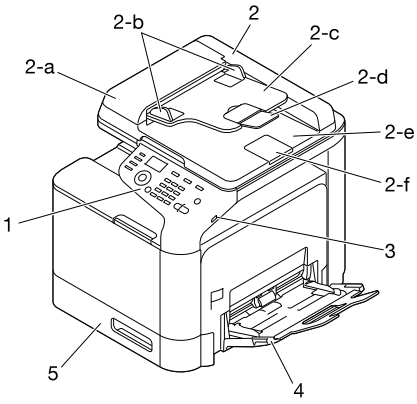

1 Control panel

2 Automatic Document Feeder (ADF)

- 2-a ADF feed cover
- 2-b Document guide
- 2-c Document feed tray
- 2-d Extension tray
- 2-e Document output tray
- 2-f Document stopper

The ADF may appear as "document cover" in some status and error messages.

Lower the document stopper when scanning Legal-size paper with the ADF.

3 USB HOST port

4 Tray 1 (Manual feed tray)

5 Tray 2

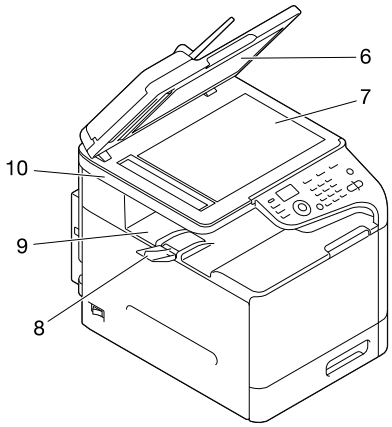

6 Original cover pad

7 Original glass

8 Extension tray

9 Output tray

10 Scanner unit

Rear View

1 10Base-T/100Base-TX/ 1000Base-T (IEEE 802.3) Ethernet interface port

2 USB port

3 Power switch

4 Power connection

5 LINE (telephone line) jack

6 TEL (telephone) jack

7 Rear cover

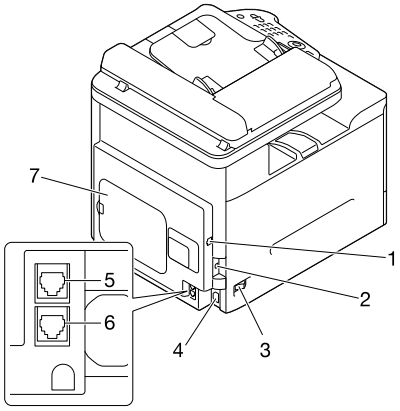

2 Control Panel and Configuration Menu

About the Control Panel

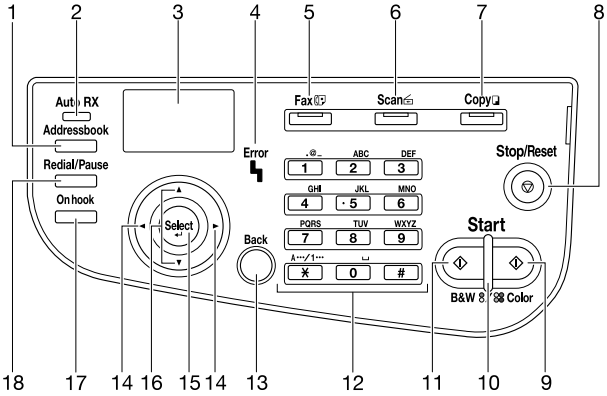

No.	Part Name	Description
1	**Addressbook** key	• Displays the information registered in the favorite list, speed dial destinations and group dial destinations. • For details, refer to “Specifying a Recipient” on page 3-9.
2	**Auto RX** indicator	• Lights up when the automatic receiving function is selected. • For details, refer to “Receiving Faxes Automatically” on page 5-2.
3	Message window	Displays settings, menus, and messages.
4	**Error** indicator	• Indicates an error condition. • For details, refer to “Error Messages on the Message Window” on page 8-5.
5	**Fax** key/LED	• Enters Fax mode. • Lights up in green to indicate that the machine is in Fax mode. • For details, refer to “Fax Mode Screen” on page 2-5.

No.	Part Name	Description
6	**Scan** key/LED	• Enters Scan mode (Scan to E-mail, Scan to FTP, Scan to a shared folder on a computer, Scan to PC, or Scan to USB Memory). • Lights up in green to indicate that the machine is in Scan mode. • For details, refer to the [Printer/Copier/Scanner User's Guide] on the Documentation CD/DVD.
7	**Copy** key/LED	• Enters Copy mode. • Lights up in green to indicate that the machine is in Copy mode. • For details, refer to the [Printer/Copier/Scanner User's Guide] on the Documentation CD/DVD.
8	**Stop/Reset** key	Returns the settings to their defaults and stops functions.
9	**Start (Color)** key	Starts color copying, scanning or faxing.
10	**Start** indicator	• Lights up in blue when copying and fax transmission are possible. • Lights up in orange when copying and fax transmissions are not possible, for example, during warm-up or if an error has occurred.
11	**Start (B&W)** key	Starts monochrome copying, scanning or faxing.
12	Keypad	• Enters desired number of copies. • Enters fax numbers, mail addresses, and names of recipients. • For details on entering text, refer to "Entering Text" on page 9-4.
13	**Back** key	• Clears the specified number of copies and entered text. • Press to return to the previous screen. • Press to cancel the setting that is currently displayed.
14	◀/▶ keys	Moves left and right through menus, options, or choices.
15	**Select** key	Press to select the setting that is currently displayed.

No.	Part Name	Description
16	▲/▼ keys	Moves up and down through menus, options, or choices.
17	**On hook** key	• Sends and receives transmissions with the receiver on the hook. • For details, refer to “Sending a Fax Manually Using the On Hook Key” on page 3-23 or “Receiving Faxes Manually” on page 5-3.
18	**Redial/Pause** key	• Recalls the last number dialed. • Inserts a pause when a number is dialed. • For details, refer to “Using the Redial Function” on page 3-13.

Fax Mode Screen

Main Screen

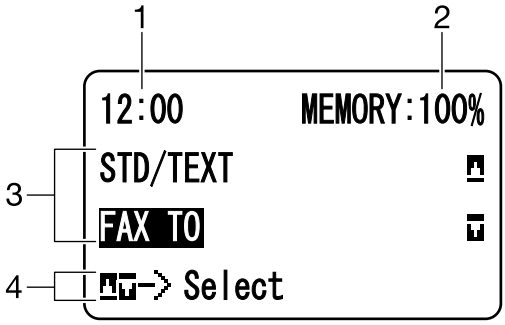

No.	Indication	Description
1	Time	Displays the time currently specified with [ADMIN. MANAGEMENT]/[USER SETTING]/[DATE&TIME] in the [UTILITY] menu.
2	Available memory	Indicates the percentage of memory available for scanning and fax operations.
3	Fax settings	Allows the current settings to be checked and the various settings to be changed. For details, refer to “Fax settings” on page 2-6.
4	Status	Depending on the situation, the machine status or an error message may appear.

- Fax settings

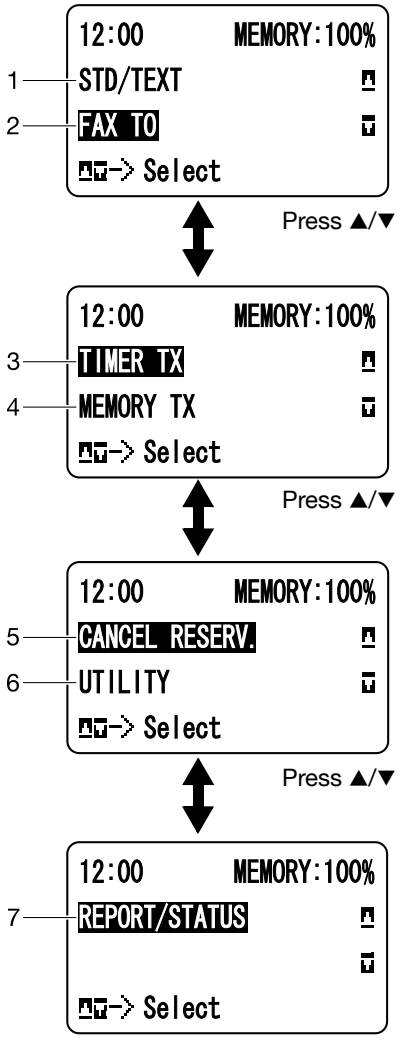

No.	Indication	Description
1	Fax quality	Indicates the fax quality that is selected. For details on selecting the fax quality, refer to “FAX TX OPERATION Menu” on page 2-19 and “Selecting the Image Quality” on page 3-7.

No.	Indication	Description
2	Fax destination	Indicates the specified fax destination. For details on specifying the destination, refer to “Specifying a Recipient” on page 3-9 and “Specifying Multiple Recipients” on page 3-14. *If no destination has been specified, [FAX TO] appears.*
3	[TIMER TX]	Select this menu item to specify the time when the fax is to be sent. For details on specifying settings for a timer transmission, refer to “Sending a Fax at a Specified Time (Timer Transmission)” on page 3-17.
4	Transmission mode	Indicates the fax transmission mode that is selected. For details on the transmission modes, refer to “FAX TX OPERATION Menu” on page 2-19 and “Memory Transmission and Direct Transmission” on page 3-20.
5	[CANCEL RESERV.]	Select this menu item to display the list of jobs queued for transmission and to delete a job. For details, refer to “Cancelling a Queued Transmission” on page 3-25. *This menu item does not appear if a destination has been specified.*
6	[UTILITY]	Select this menu item to change the various machine settings. For details, refer to “UTILITY Menu” on page 2-9. *This menu item does not appear if a destination has been specified.*
7	[REPORT/STATUS]	Select this menu item to view the total number of pages printed by this machine and the results of fax transmissions/receptions as well as to print reports. For details, refer to “Confirmation Mode” on page 7-1. *This menu item does not appear if a destination has been specified.*

Entering Fax Mode

Before using the Fax function, make sure that the **Fax** key lits green. Otherwise, press it to enter the Fax mode.

Pressing the **Redial/Pause** key or **On hook** key switches the machine to Fax mode when it is in any mode other than Fax mode.

Symbol list

Symbol		Description
	Dialing	A fax number is being dialed.
	Ringing	The machine is being called.
	Sending	The document is being sent.
	Receiving	A document is being received.
	Number of scanning document pages	The number of scanning document pages appears next to the icon.
	Tone	If Pulse is selected as the telephone line type, press the ✱ key to temporarily change the line type to Tone.
	Pause	A pause is inserted.
	Queued timer transmission or batch transmission	A document is queued for timer transmission or batch transmission.
	Memory reception	A document is queued for memory reception.

UTILITY Menu

From this menu, various machine settings can be changed. The [UTILITY] menu is structured as shown below.

For details on specifying settings on the [UTILITY] menu, refer to "Specifying Settings in UTILITY Menu" on page 2-28.

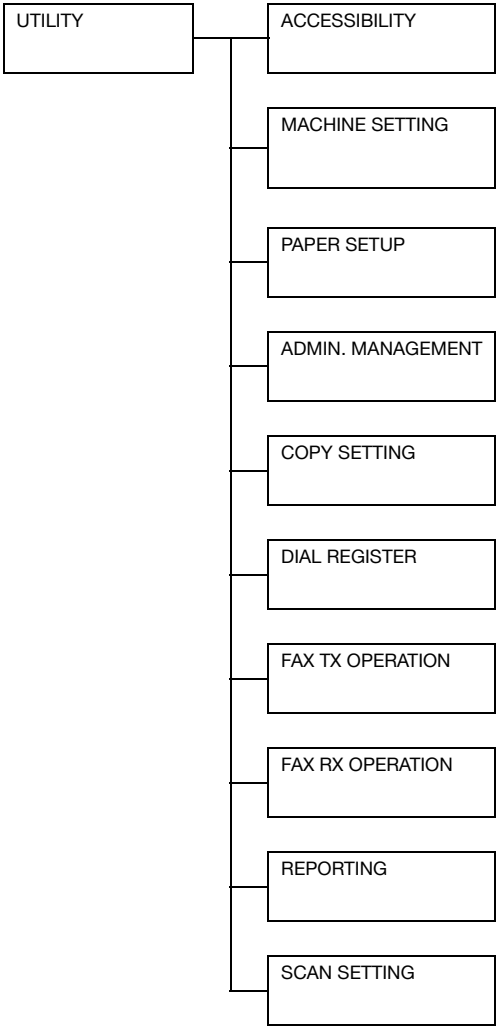

For details on specifying settings for options in the [ACCESSIBILITY], [PAPER SETUP], [COPY SETTING], [SCAN SETTING] menus and for some options in the [MACHINE SETTING] and [ADMIN. MANAGEMENT] menus, refer to the [Printer/Copier/Scanner User's Guide] on the Documentation CD/DVD.

MACHINE SETTING Menu

Specify settings related to machine operations and displays by selecting [MACHINE SETTING] in the [UTILITY] menu.

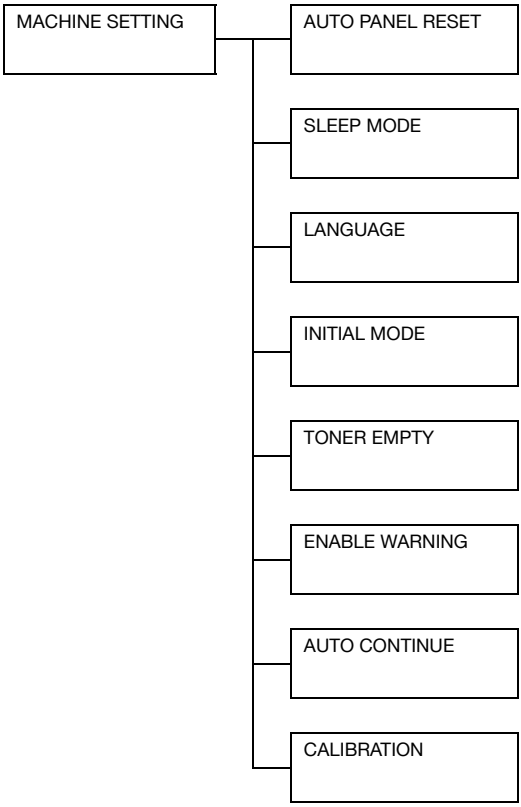

[AUTO PANEL RESET]	For details on specifying settings, refer to the [Printer/Copier/Scanner User's Guide] on the Documentation CD/DVD.	
[SLEEP MODE]		
[LANGUAGE]		
[INITIAL MODE]	Settings	**[COPY]** / [FAX] / [SCAN]
	Select the mode that the machine starts up in or returns to after the automatic reset.	
[TONER EMPTY]	Settings	**[STOP]** / [BW CONTINUE]
	Select whether or not printing, copying and faxing stop when the toner has run out. ● [STOP]: Printing, copying and faxing stop when the toner has run out. ● [BW CONTINUE]: Monochrome printing, monochrome copying and fax reception can continue when one or more color toners run out while black toner still remains.	
[ENABLE WARNING]	For details on specifying settings, refer to the [Printer/Copier/Scanner User's Guide] on the Documentation CD/DVD.	
[AUTO CONTINUE]	Settings	[ON] / **[OFF]**
	Select whether to continue or stop printing if a paper size error occurs during printing. ● [ON]: Printing continues even if a paper size error has occurred. ● [OFF]: Printing stops if a paper size error has occurred.	
[CALIBRATION]	For details on specifying settings, refer to the [Printer/Copier/Scanner User's Guide] on the Documentation CD/DVD.	

ADMIN. MANAGEMENT Menu

Specify machine administrator settings, such as network settings, by selecting [ADMIN. MANAGEMENT] in the [UTILITY] menu.

*The [ADMIN. MANAGEMENT] menu is accessible only by the administrator. To display the settings for this menu, select [ADMIN. MANAGEMENT], use the keypad to type in the 6-digit administrator access code (default: **000000**), and then press the **Select** key.*

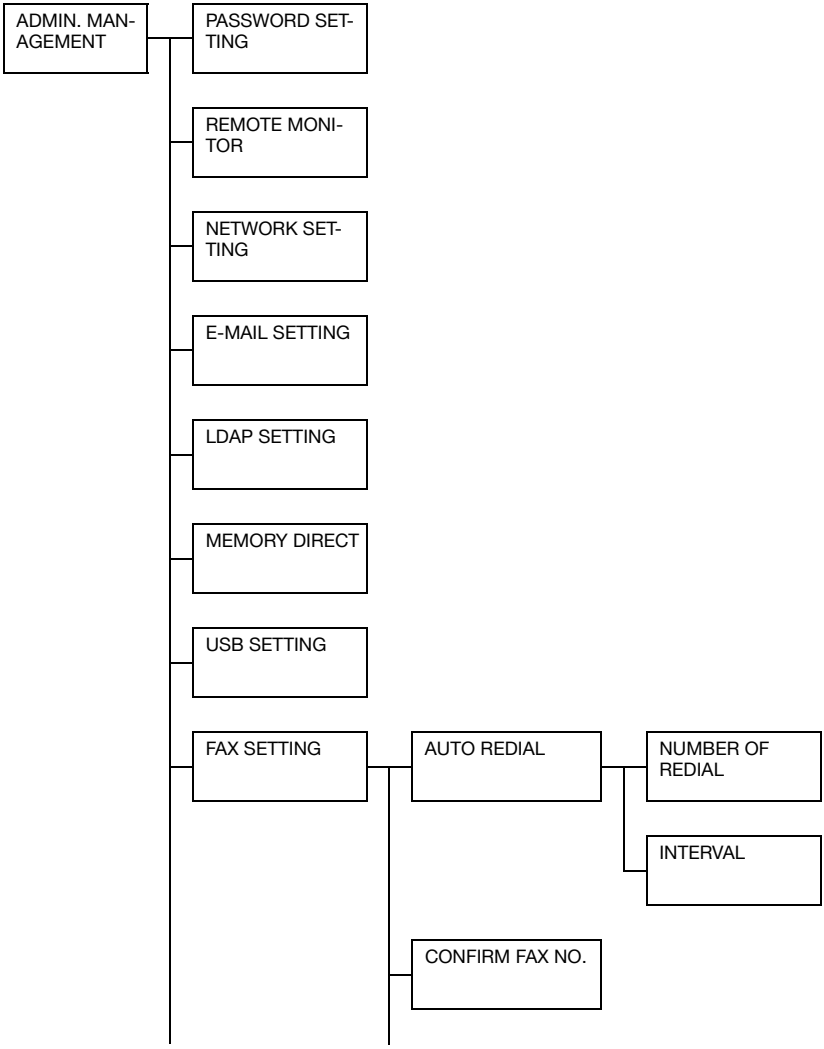

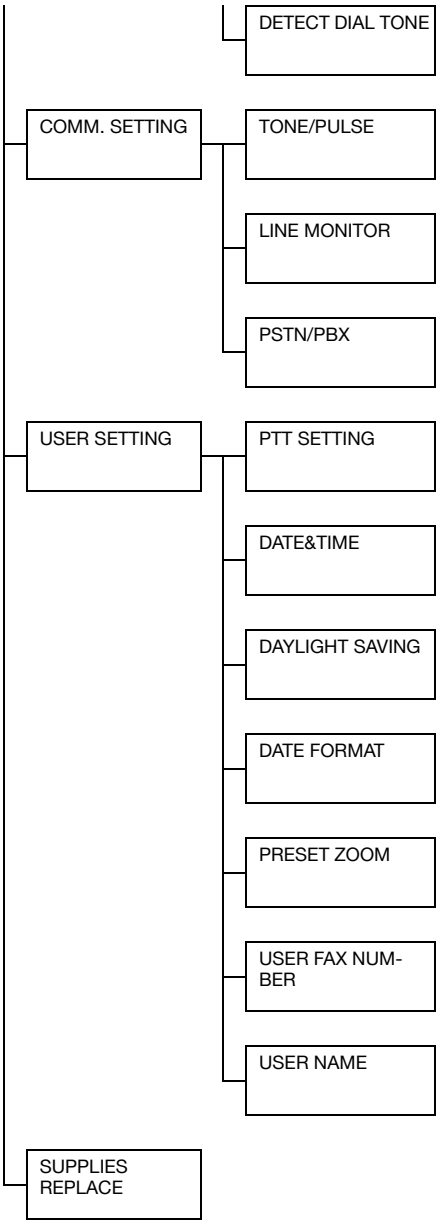
DETECT DIAL TONE
COMM. SETTING
TONE/PULSE
LINE MONITOR
PSTN/PBX
USER SETTING
PTT SETTING
DATE&TIME
DAYLIGHT SAVING
DATE FORMAT
PRESET ZOOM
USER FAX NUM-
BER
USER NAME
SUPPLIES
REPLACE

<table>
<tr><td colspan="2">[PASSWORD SETTING]</td><td colspan="3" rowspan="7">For details on specifying settings, refer to the [Printer/Copier/Scanner User's Guide] on the Documentation CD/DVD.</td></tr>
<tr><td colspan="2">[REMOTE MONITOR]</td></tr>
<tr><td colspan="2">[NETWORK SETTING]</td></tr>
<tr><td colspan="2">[E-MAIL SETTING]</td></tr>
<tr><td colspan="2">[LDAP SETTING]</td></tr>
<tr><td colspan="2">[MEMORY DIRECT]</td></tr>
<tr><td colspan="2">[USB SETTING]</td></tr>
<tr><td rowspan="6">[FAX SETTING]</td><td rowspan="4">[AUTO REDIAL]</td><td rowspan="2">[NUMBER OF REDIAL]</td><td>Settings</td><td>1-10 (Default: Depends on [PTT SETTING])</td></tr>
<tr><td colspan="2">Specify the number of times a redial is attempted if there is no answer, for example, when the line is busy.</td></tr>
<tr><td rowspan="2">[INTERVAL]</td><td>Settings</td><td>1-99 min (Default: Depends on [PTT SETTING])</td></tr>
<tr><td colspan="2">Specify the interval between redial attempts.</td></tr>
<tr><td rowspan="2">[CONFIRM FAX NO.]</td><td>Settings</td><td colspan="2">**[OFF]** / [ON]</td></tr>
<tr><td colspan="3">Select whether or not the destination address must be entered a second time for confirmation when directly typing in the address. Requiring that the address be entered twice reduces misdirected faxes caused by the address being mistyped.</td></tr>
<tr><td rowspan="2">[DETECT DIAL TONE]</td><td>Settings</td><td colspan="2">[OFF] / [ON] (Default: Depends on [PTT SETTING])</td></tr>
<tr><td colspan="3">Select whether or not to detect a dial tone before dialing a fax number.
If [ON] is selected, the fax will not be sent when no dial tone is detected.</td></tr>
</table>

[COMM. SETTING]	[TONE/ PULSE]	Settings	**[TONE]** / [PULSE]
		Select the dialing system. If this parameter is not correctly set to the type of dialing system used, faxes cannot be sent and received. Select the correct setting after checking which type of dialing system is used by your telephone line. *If [PTT SETTING] in the [USER SETTING] menu is set to [U.S.A], [CANADA] or [NEW ZEALAND], the settings cannot be changed.*	
	[LINE MONITOR]	Settings	[OFF] / **[LOW]** / [HIGH]
		Select the volume of the monitoring sound of the transmission signal. *Even when [OFF] is selected, the monitoring sound can be heard when the **On hook** key is pressed.*	
	[PSTN/ PBX]	Settings	**[PSTN]** / [PBX]
		Select either [PSTN] or [PBX], depending on the environment being used. • [PSTN]: Select this setting if there is no telephone switchboard in the environment being used. • [PBX]: Select this setting if there is a telephone switchboard in the environment being used or if an internal phone system is used. If [PBX] is selected, specify the outside line access number.	

[USER SETTING]	[PTT SETTING]	Settings	[ARGENTINA] / [AUSTRALIA] / [AUSTRIA] / [BELGIUM] / [BRAZIL] / [CANADA] / [CHINA] / [CZECH] / [DENMARK] / [EUROPE] / [FINLAND] / [FRANCE] / [GERMANY] / [GREECE] / [HONG KONG] / [HUNGARY] / [IRELAND] / [ISRAEL] / [ITALY] / [JAPAN] / [KOREA] / [MALAYSIA] / [MEXICO] / [THE NETHERLANDS] / [NEW ZEALAND] / [NORWAY] / [PHILIPPINES] / [POLAND] / [PORTUGAL] / [RUSSIA] / [SAUDI ARABIA] / [SINGAPORE] / [SLOVAKIA] / [SOUTH AFRICA] / [SPAIN] / [SWEDEN] / [SWITZERLAND] / [TAIWAN] / [TURKEY] / **[U.S.A]** / [UNITED KINGDOM] / [VIETNAM]
		Select the country where this machine is installed.	
	[DATE& TIME]	Settings	[TIME]: 00:00-23:59 (Default: **[00:00]**) [DATE]: '08/01/01-'32/12/31 (Default: **['08/01/01]**) [ZONE]: GMT+12:00-GMT-12:00 (in 30-minute intervals) (Default: **[GMT+00:00]**)
		Use the keypad to specify the current date, time and time zone.	
	[DAYLIGHT SAVING]	Settings	**[OFF]** / [ON] (1-150 min (Default: **[60 min]**))
		Select whether or not daylight saving time is applied. If [ON] is selected, specify how many minutes the time will be adjusted.	
	[DATE FORMAT]	Settings	**[MM/DD/YY]** / [DD/MM/YY] / [YY/MM/DD]
		Select the display format for reports and lists.	

[USER SETTING]	[PRESET ZOOM]	For details on specifying settings, refer to the [Printer/Copier/Scanner User's Guide] on the Documentation CD/DVD.
	[USER FAX NUMBER]	Enter your fax number. A maximum of 20 characters (consisting of numbers, spaces, + and -) can be entered. The specified number is printed in the header of outgoing faxes. The default setting is blank.
	[USER NAME]	Enter your name. A maximum of 32 characters can be entered. The specified name is printed in the header of outgoing faxes. The default setting is blank.
[SUPPLIES REPLACE]		For details on specifying settings, refer to the [Printer/Copier/Scanner User's Guide] on the Documentation CD/DVD.

DIAL REGISTER Menu

Register addresses in the favorite list, as speed dial destinations or as group dial destinations by selecting [DIAL REGISTER] in the [UTILITY] menu.

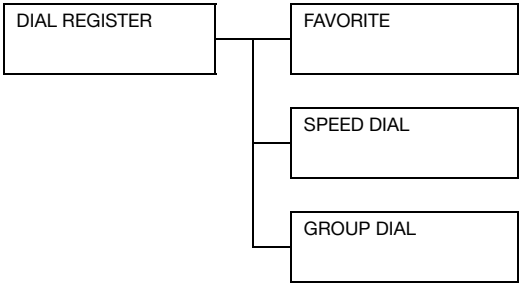

[FAVORITE]	Frequently specified speed dial destinations and group dial destinations can be registered in the favorite list. Press the **Addressbook** key, and then press the ▲ or ▼ key to quickly select the desired destination. A maximum of 20 destinations can be registered in the favorite list. For details, refer to “Favorite List” on page 6-3.
[SPEED DIAL]	Register frequently used fax numbers and e-mail addresses as speed dial destinations. Instead of being entered manually, fax numbers and e-mail addresses can simply be recalled to ensure that destination information is registered correctly. A maximum of 220 speed dial destinations (fax numbers and e-mail addresses) can be registered. For details on specifying speed dial numbers, refer to “Speed Dialing” on page 6-5.

[GROUP DIAL]	Register frequently used broadcast destinations as a group dial destination. Multiple destinations can be recalled simply by selecting a registered group. A maximum of 20 group dial destinations can be registered. A maximum of 50 destinations can be registered with one group dial destination. For details, refer to “Group Dialing” on page 6-8.

FAX TX OPERATION Menu

Specify settings related to fax transmissions by selecting [FAX TX OPERATION] in the [UTILITY] menu.

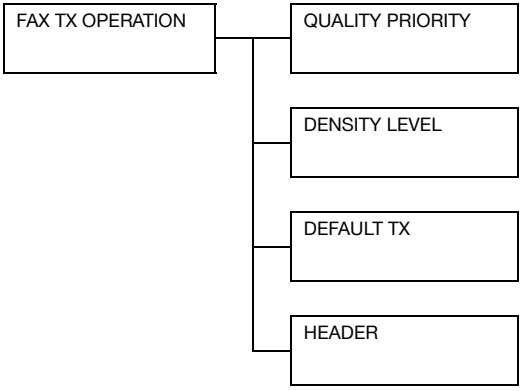

[QUALITY PRIORITY]	Settings	**[STD/TEXT]** / [FINE/TEXT] / [S-FINE/TEXT] / [STD/PHOTO] / [FINE/PHOTO] / [S-FINE/PHOTO]
	Select the default scanning resolution (fax document quality). ● [STD/TEXT]: Select this setting for documents containing handwriting or for computer printouts. ● [FINE/TEXT]: Select this setting for documents containing small print. ● [S-FINE/TEXT]: Select this setting for documents containing small print, such as newspapers, and documents containing detailed illustrations. ● [STD/PHOTO]: Select this setting for photo documents containing regular photos. ● [FINE/PHOTO]: Select this setting for photo documents containing fine images. ● [S-FINE/PHOTO]: Select this setting for photo documents containing finer images. To change the resolution during transmission from the default setting specified here, refer to "Selecting the Original Quality" on page 3-7.	
[DENSITY LEVEL]	Settings	(Light) ◁□■□▷ (Dark)
	Specify the density for scanning a document. To change the density during transmission from the default setting specified here, refer to "Selecting the Scan Density" on page 3-8.	

[DEFAULT TX]	Settings	**[MEMORY TX]** / [DIRECT TX]
	Select the desired method for sending documents. ● [MEMORY TX]: With this method, the fax transmission starts after the entire document is scanned and stored in the memory. The total number of pages is automatically printed with the page number in the header. However, the memory may become full if there are many pages in the document or if the data is large due to the fine image quality (resolution). ● [DIRECT TX]: With this method, the transmission is performed in real time in the transmission sequence of the destinations. If there are many pages in the document, the fax can be sent with this method without the memory becoming full. To change the method for sending documents during transmission from the default setting specified here, refer to “Memory Transmission and Direct Transmission” on page 3-20.	
[HEADER]	Settings	[OFF] / **[ON]**
	Select whether or not to print transmission source information (date/time of transmission, sender's name, sender's fax number, session number and page number) for the machine in the transmitted document. *If [PTT SETTING] in the [USER SETTING] menu is set to [U.S.A], [CANADA] or [KOREA], this setting cannot be changed.*	

FAX RX OPERATION Menu

Specify settings related to fax receptions by selecting [FAX RX OPERATION] in the [UTILITY] menu.

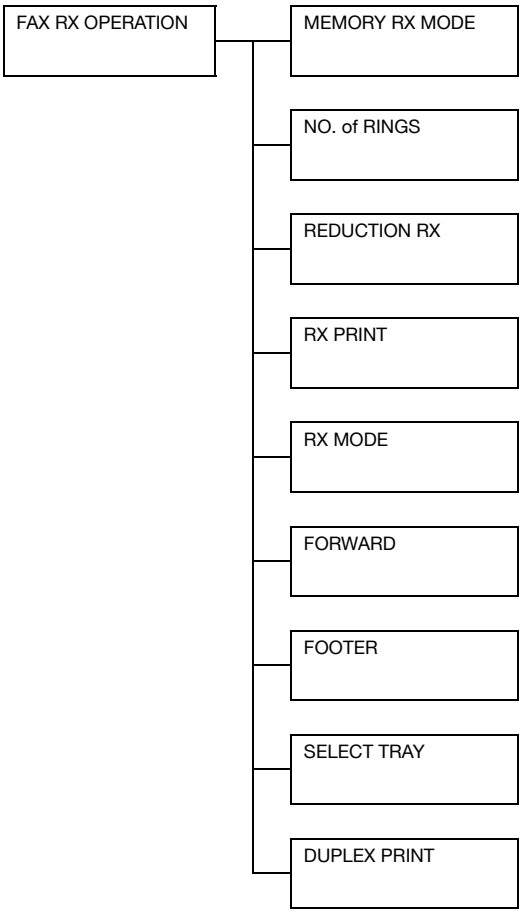

[MEMORY RX MODE]	Settings	**[OFF]** / [ON]
	Select whether to allow (ON) memory reception or not (OFF). Select [ON] not to print when receiving confidential faxes or when no one is around, for example, at night. The received documents can be stored in memory and printed at a specified time or when memory reception is turned off (this function is set to [OFF]). A password can be set to specify the starting time or ending time of memory reception, or to cancel the function. The set starting time and ending time are valid every day until memory reception is turned off. For details on specifying settings, refer to "Setting Up the Memory RX Mode" on page 2-29.	
[NO. of RINGS]	Settings	1-16 (Default: Depends on [PTT SETTING])
	Enter the number of rings (between 1 and 16) until the machine automatically begins receiving the fax when an external telephone is connected.	
[REDUCTION RX]	Settings	[OFF] / **[ON]** / [CUT]
	Select whether documents longer than the current paper size are printed reduced, split, or discarded. ● [ON]: The document is printed at a reduced size. ● [OFF]: The document is printed at full size and split onto multiple pages. ● [CUT]: The document is printed, but any part that does not fit within the page is erased. For details on the relationship between the length of the received document and the document that is actually printed, refer to "Printing Received Faxes" on page 5-5.	

[RX PRINT]	Settings	**[MEMORY RX]** / [PRINT RX]
	Select whether the fax is printed only after all document pages have been received or printing begins as soon as the first page of the document is received. ● [MEMORY RX]: Printing begins after all pages have been received. ● [PRINT RX]: Printing begins after the first page has been received.	
[RX MODE]	Settings	**[AUTO RX]** / [MANUAL RX]
	Select whether the reception mode is set to automatic reception or manual reception. ● [AUTO RX]: Automatically begins receiving the fax after the set number of rings. ● [MANUAL RX]: Does not automatically receive the fax. Reception begins after making a connection by picking up the telephone receiver or pressing the **On hook** key, then pressing the **Start** key. For details on manual reception, refer to “Receiving Faxes Manually” on page 5-3.	
[FORWARD]	Settings	**[OFF]** / [ON] / [ON (PRINT)]
	Select whether or not to forward received fax documents. ● [OFF]: Select this setting to not forward the document. ● [ON]: Select this setting to forward the received fax document to the specified fax number or e-mail address. ● [ON (PRINT)]: Select this setting to forward the received fax document to the specified fax number or e-mail address at the same time that the machine prints it. For details on specifying settings, refer to “Specifying Forwarding Settings” on page 2-30.	

[FOOTER]	Settings	**[OFF]** / [ON]
	Select whether or not the reception information (date received, number of pages, etc.) is printed at the bottom of each received document.	
[SELECT TRAY]	Settings	[TRAY1]: [DISABLE] / **[ENABLE]** [TRAY2]: [DISABLE] / **[ENABLE]** [TRAY3]: [DISABLE] / **[ENABLE]**
	Select which paper tray can be used to supply paper when printing received documents or transmission reports. A paper tray that cannot be used for supplying paper can also be specified. *If an optional Lower Feeder Unit PF-P09 is not installed, [TRAY3] does not appear.*	
[DUPLEX PRINT]	Settings	**[DISABLE]** / [ENABLE]
	Select whether or not both sides of the paper is printed on when a document containing multiple pages is received. *Duplex printing cannot be performed when the paper size is 8 1/2 × 13 1/2.*	

REPORTING Menu

Specify report settings by selecting [REPORTING] in the [UTILITY] menu.

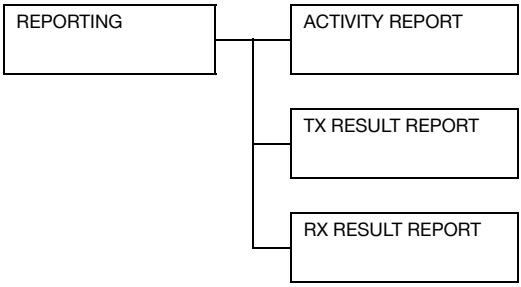

Manufacturer's default settings appear in bold.

[ACTIVITY REPORT]	Settings	[OFF] / **[ON]**
	After every 60 transmissions/receptions, a report can be printed to show the results of the transmissions/receptions. Select whether the report is printed automatically when the 60th transmission/reception is reached.	
[TX RESULT REPORT]	Settings	[ON] / **[ON(ERROR)]** / [OFF]
	Select whether the report showing the result of a transmission is printed automatically after the transmission is finished. ● [ON]: Prints the report after each transmission. ● [ON(ERROR)]: Prints the error details together with a reduced image of the first page of the document when a transmission error has occurred. ● [OFF]: Does not print the report after each transmission, even if an error has occurred. The transmission result report is normally printed after a broadcast transmission.	

[RX RESULT REPORT]	Settings	[ON] / **[ON(ERROR)]** / [OFF]
	Select whether the report showing the result of a reception is printed automatically after the reception is finished. ● [ON]: Prints the report after each reception. ● [ON(ERROR)]: Prints the report after a reception only if an error occurred. ● [OFF]: Does not print the report after each reception, even if an error has occurred.	

Specifying Settings in UTILITY Menu

General Procedure for Specifying Settings in UTILITY Menu

1 Press the ▲ or ▼ key to select [UTILITY], and then press the **Select** key.

2 Press the ▲ or ▼ key to select the desired menu, and then press the **Select** key to display the selected menu.

Refer to the menu configuration on page 2-9 to display the desired menu.

3 To select a setting, press the ▲, ▼, ◄ or ► key.
To enter a setting, use the keypad to type in the number.

4 Press the **Select** key.
The setting is applied.

*To cancel the settings, press the **Back** key.*

Memory Reception

Received faxes can be stored in the memory and printed at a specified time. This is convenient, for example, when confidential documents are received.

Memory reception can be used with the following settings.

- Start/end time settings: Not set
  [MEMORY RX MODE] function is normally set to [ON]. To print a fax saved in memory, set [MEMORY RX MODE] function to [OFF].
- Start/end time settings: Set
  Memory reception mode begins and ends at the specified time.

  Example 1: When [ON TIME] setting is set to 18:00 and [OFF TIME] setting is set to 8:00

  The machine is in memory reception mode from 18:00 to 8:00 and in normal reception mode, where faxes are printed after being received, from 8:00 to 18:00.

  Example 2: When [ON TIME] setting is set to 12:00 and [OFF TIME] setting is set to 12:00 (the start time and end time are the same)

  [MEMORY RX MODE] function is normally set to [ON]; however, faxes saved in memory are printed at 12:00.

Setting Up the Memory RX Mode

1 Press the ▲ or ▼ key to select [UTILITY], and then press the **Select** key.

2 Press the ▲ or ▼ key to select [FAX RX OPERATION], and then press the **Select** key.

3 Check that [MEMORY RX MODE] is selected, and then press the **Select** key.

4 Using the ▲ or ▼ keys, select [ON], and then press the **Select** key.

5 Use the keypad to type in the time when memory reception mode begins, and then press the **Select** key.

The ending time input box appears.

*To specify no start time, press the **Select** key without specifying a time.The password input box appears. Continue with step 7.*

6 Use the keypad to type in the time when memory reception mode ends, and then press the **Select** key.

The password input box appears.

7 Enter the password, and then press the **Select** key.

Memory reception mode is set.

The password is required for turning off memory reception mode or changing the start/end times. Enter a 4-digit number.

*To specify no password, press the **Select** key without specifying a password.*

Turning Off the Memory RX Mode

1 Press the ▲ or ▼ key to select [UTILITY], and then press the **Select** key.

2 Press the ▲ or ▼ key to select [FAX RX OPERATION], and then press the **Select** key.

3 Check that [MEMORY RX MODE] is selected, and then press the **Select** key.

4 Using the ▲ or ▼ keys, select [OFF], and then press the **Select** key.

The password input box appears.

If no password was specified, memory reception mode is canceled.

5 Enter the password, and then press the **Select** key.

Memory reception mode is canceled.

If faxes are saved in memory, printing of the faxes begins.

Specifying Forwarding Settings

1 Press the ▲ or ▼ key to select [UTILITY], and then press the **Select** key.

2 Press the ▲ or ▼ key to select [FAX RX OPERATION], and then press the **Select** key.

3 Press the ▲ or ▼ key to select [FORWARD], and then press the **Select** key.

The [FORWARD] setting appears.

4 Press the ▲ or ▼ key to select [ON] or [ON (PRINT)], and then press the **Select** key.

5 Enter the destination, or select from the speed dial destinations.

*To select from the speed dial destinations, press the **Address-book** key, type in the speed dial number, and then press the **Select** key.*

An e-mail address can also be specified.

6 Press the **Select** key.

The forwarding settings are specified.

Sending Faxes 3

Basic Fax Operation

This section contains basic information of fax transmission.

Documents with the following paper sizes can be faxed.

- *When using the original glass*
  Document size: A5/A4/Statement/Letter
- *When using the ADF*
  Width: 140 to 216 mm
  Length: 148 to 500 mm

Sending a Fax Using the ADF

If the ADF is used, original documents containing multiple pages can be automatically scanned.

Do not load original documents that are bound together, for example, with paper clips or staples.

Do not load more than 35 sheets; otherwise an original document misfeed or damage to the document or machine may occur.

If the original document is not loaded correctly, it may not be fed in straight, or an original document misfeed or damage to the document may occur.

Do not open the ADF cover while documents loaded into the ADF are being scanned.

1 Press the **Fax** key to enter Fax mode.

If the initial mode ([UTILITY] - [MACHINE SETTING] - [INITIAL MODE]) is set to [FAX], this step can be skipped.

2 Make sure that there is no document on the original glass.

3 Put the document into the ADF document feed tray face up.

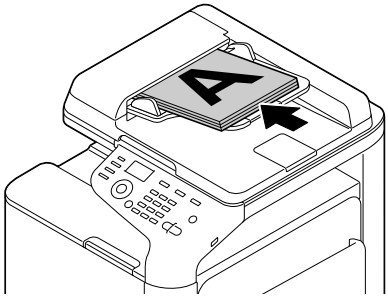

4 Adjust the document guides to the document size.

5 Select the document image quality.

For details on selecting the document image quality, refer to "Selecting the Image Quality" on page 3-7.

6 Specify the fax number of the recipient in one of the following ways:

- Direct dialing
- Using the favorite list
- Using the Speed Dial function
- Using the Group Dial function
- Using the Address Book function
- Using the **Redial/Pause** key

*For details on specifying the recipient, refer to "Specifying a Recipient" on page 3-9. For details on using the **Redial/Pause** key, refer to "Using the Redial Function" on page 3-13.*

A transmission can also be sent to multiple recipients with the Broadcast function. For details on sending a broadcast transmission, refer to "Sending a Fax to Multiple Recipients (Broadcast Transmission)" on page 3-14.

7 Press the **Start** key.
The document is scanned, and then the fax is sent.

*To stop the transmission, press the **Stop/Reset** key. A message appears, requesting confirmation to cancel the setting. Select [YES], and then press the **Select** key.*

*If [FAX TX] in [ADMIN. MANAGEMENT]/[PASSWORD SETTING]/[FULL FUNC. NO.] has been restricted, type in the number specified for [FULL FUNC. NO.] after pressing the **Start** key.*

If the fax could not be sent (for example, because the line was busy), the automatic redial function will try sending the transmission again. If the fax could not be sent with the automatic redial function, a TX Result Report can be printed. For details, refer to "TX RESULT REPORT" on page 7-4.

If you want to cancel a scanned document queued for transmission or a fax waiting to be redialed, select [CANCEL RESERV.] from the menu. For details, refer to "Cancelling a Queued Transmission" on page 3-25.

If memory is nearly full, scanning of the document is stopped and a message appears, allowing you to select whether to start the transmission or cancel that transmission job. If the selection is made to cancel the job, the pages of the document that have been scanned for that job are deleted. If the selection is made to begin the transmission, transmission begins. After the scanned pages have been sent, scanning of the document starts again.

Sending a Fax Using the Original Glass

1 Press the **Fax** key to enter Fax mode.

If the initial mode ([UTILITY] - [MACHINE SETTING] - [INITIAL MODE]) is set to [FAX], this step can be skipped.

2 Remove all documents from the ADF.

If you are using the original glass to scan, do not load any documents into the ADF.

3 Lift to open the ADF cover.

4 Place the original document face down on the original glass and align the document on the scales above and to the left of the original glass.

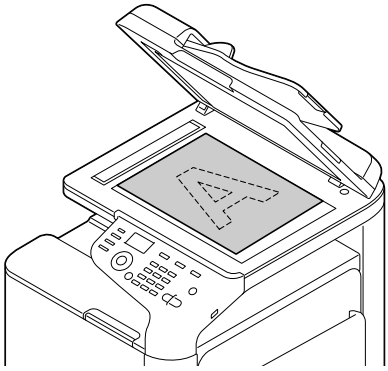

5 Gently close the ADF cover.

Closing it too quickly may cause the document to move on the original glass.

6 Select the document image quality.

For details on selecting the document image quality, refer to "Selecting the Image Quality" on page 3-7.

7 Specify the fax number of the recipient in one of the following ways:

- Direct dialing
- Using the favorite list
- Using the Speed Dial function
- Using the Group Dial function
- Using the Address Book functions
- Using the **Redial/Pause** key

*For details on specifying the recipient, refer to "Specifying a Recipient" on page 3-9. For details on using the **Redial/Pause** key, refer to "Using the Redial Function" on page 3-13.*

A transmission can also be sent to multiple recipients with the Broadcast function. For details on sending a broadcast transmission, refer to "Sending a Fax to Multiple Recipients (Broadcast Transmission)" on page 3-14.

8 Press the **Start** key.
A screen appears, requesting confirmation of the scanning area.

9 To scan the displayed scanning area, press the **Select** key. The document is scanned.

*To change the displayed scanning area, press the ▲ or ▼ key, select the desired scanning area. Press the **Select** key again to start scanning.*

10 To scan multiple pages from the original glass, check that the message [NEXT PAGE?] appears, replace the document, and then press the **Select** key. When scanning of the document is finished, press the **Start** key.
The document is scanned, and then the fax is sent.

*To stop the transmission, press the **Stop/Reset** key. A message appears, requesting confirmation to cancel the setting. Select YES, and then press the **Select** key.*

*If [FAX TX] in [ADMIN. MANAGEMENT]/[PASSWORD SETTING]/[FULL FUNC. NO.] has been restricted, type in the number specified for [FULL FUNC. NO.] after pressing the **Start** key.*

If the fax could not be sent (for example, because the line was busy), the automatic redial function will try sending the transmission again. If the fax could not be sent with the automatic redial function, a TX Result Report can be printed. For details, refer to "TX RESULT REPORT" on page 7-4.

If you want to cancel a scanned document queued for transmission or a fax waiting to be redialed, select [CANCEL RESERV.] from the menu. For details, refer to "Cancelling a Queued Transmission" on page 3-25.

If memory is nearly full, scanning of the document is stopped and a message appears, allowing you to select whether to start the transmission or cancel that transmission job. If the selection is made to cancel the job, the pages of the document that have been scanned for that job are deleted. If the selection is made to begin the transmission, transmission begins. After the scanned pages have been sent, scanning of the document starts again.

Selecting the Image Quality

The image quality of a document can be adjusted before it is sent as a fax.

Selecting the Original Quality

1 Press the ▲ or ▼ key to select the current fax image quality, and then press the **Select** key.

[STD/TEXT], [FINE/TEXT], [S-FINE/TEXT], [STD/PHOTO], [FINE/PHOTO] or [S-FINE/PHOTO] may appear, depending on the setting selected for [FAX TX OPERATION] in the [UTILITY] menu.

2 Check that [QUALITY (ORIGINAL)] is selected, and then press the **Select** key.

3 Press the ▼ or ▲ key to select the quality of the original, and then press the **Select** key.

Select the resolution appropriate for the document.

- *[STD/TEXT]: Select this setting for documents containing handwriting or for computer printouts.*
- *[FINE/TEXT]: Select this setting for documents containing small print.*
- *[S-FINE/TEXT]: Select this setting for documents containing small print, such as newspapers, and documents containing detailed illustrations.*
- *[STD/PHOTO]: Select this setting for photo documents containing regular photos.*
- *[FINE/PHOTO]: Select this setting for photo documents containing fine images.*
- *[S-FINE/PHOTO]: Select this setting for photo documents containing finer images.*

The resolution returns to the default setting after the document is scanned with a normal transmission or after transmission after manual transmission. The default setting can be changed. This is useful for specifying a frequently used resolution setting as the default. For details, refer to “FAX TX OPERATION Menu” on page 2-19.

Selecting the Scan Density

1 Press the ▲ or ▼ key to select the current fax image quality, and then press the **Select** key.

[STD/TEXT], [FINE/TEXT], [S-FINE/TEXT], [STD/PHOTO], [FINE/PHOTO] or [S-FINE/PHOTO] may appear, depending on the setting selected for [FAX TX OPERATION] in the [UTILITY] menu.

2 Press the ▲ or ▼ key to select [DENSITY], and then press the **Select** key.

3 Press the ◀ or ▶ key to select the scan density, and then press the **Select** key.

Specifying a Recipient

The recipients can be specified in any of the following ways.

- Direct dialing: Directly type in the fax number.
- Using the favorite list: Recall a speed dial destination or group dial destination registered on the favorite list.
- Using the Speed Dial function: Specify a recipient registered with a speed dial.
- Using group dial numbers: Recall a registered group dial destination.
- Using the address book functions: List or search for recipients registered as speed dial numbers or group dial numbers, and then select a recipient.
- Using the **Redial/Pause** key: Specify the number of the recipient dialed last.

Directly Entering a Fax Number

1 Use the keypad to type in the fax number for the recipient.

*The keys that can be used to enter the fax number are: the number keys (0 through 9), * and #. Press the **Redial/Pause** key to enter "P" (pause). However, this cannot be entered in front of the fax number.*

If the machine is connected to a PBX line and the prefix number (outside line access number) has been specified in the [COMM. SETTING], enter # to dial the outside line access number automatically.

*To erase the entered number, hold down the **Back** key for about one second, or press the **Stop/Reset** key.*

2 Press the **Select** key.

If [CONFIRM FAX NO.] is set to [ON], type in the fax number again for confirmation. For details on specifying the setting for [CONFIRM FAX NO.], refer to “ADMIN. MANAGEMENT Menu” on page 2-12.

3 Press the ▲ or ▼ key to select [FINISH], and then press the **Select** key.

The destination is specified.

*To erase the selected destinations, press the **Stop/Reset** key.*

Using the Favorite List

If frequently specified speed dial destinations and group dial destinations are registered in the favorite list, press the **Addressbook** key, and then press the ▲ or ▼ key to quickly select the desired destination.

The destination must have been previously registered on the favorite list. For details, refer to "Registering Destinations in the Favorite List" on page 6-3.

1 Press the **Addressbook** key.

*The **Addressbook** key can be used if the main screen or [Can Use AddressBook] is displayed.*

2 Press the ▲ or ▼ key to select the desired destination, and then press the **Select** key.

*If a destination was incorrectly selected, press the **Back** key, press the **Addressbook** key, and then select the correct destination.*

3 Press the **Select** key again.

4 Press the ▲ or ▼ key to select [FINISH], and then press the **Select** key.

The destination is specified.

If a group dial destination was selected, multiple destinations are specified.

*To erase the selected destinations, press the **Stop/Reset** key.*

Using the Speed Dial Function

If a recipient has been registered with a speed dial number, the recipient's fax number can be dialed simply by pressing a speed dial number key.

The recipient must have been registered with a speed dial in advance. For details, refer to "Registering a Speed Dial Destination" on page 6-5.

1 Press the **Addressbook** key twice.

*The **Addressbook** key can be used if the main screen or [Can Use AddressBook] is displayed.*

2 Use the keypad to type in the speed dial number(1-220), and then press the **Select** key.

*If a number was incorrectly entered, press the **Back** key, and then type in the correct number of the speed dial destination.*

If the entered speed dial number is not registered with a fax number, the message [NOT FAX NO.] appears. In addition, if the entered speed dial number is not registered with a recipient, the message [NOT REGISTERED!] appears. Enter a speed dial number registered with a fax number.

3 When [OK=Select] appears, press the **Select** key again.

4 Press the ▲ or ▼ key to select [FINISH], and then press the **Select** key.

The destination is specified.

*To erase the selected destinations, press the **Stop/Reset** key.*

Using the List Function of the Address Book

If a recipient is registered with a speed dial number or a group dial number, the recipient can be found by using the List or Search function of the address book.

Follow the procedure described below to search using the List function of the address book.

1 Press the **Addressbook** key four times.

*The **Addressbook** key can be used if the main screen or [Can Use AddressBook] is displayed.*

2 Check that [LIST] is selected, and then press the **Select** key.
The list of programmed speed dial numbers and group dial numbers is displayed.

3 Press the ▲ or ▼ key to select the desired destination, and then press the **Select** key.

*If a destination was incorrectly selected, press the **Back** key, and then perform the operation again from step 1.*

4 When [OK=Select] appears, press the **Select** key again.

5 Press the ▲ or ▼ key to select [FINISH], and then press the **Select** key.

*To erase the selected destinations, press the **Stop/Reset** key.*

Using the Search Function of the Address Book

If a recipient is registered with a speed dial number or a group dial number, the recipient can be found by using the List or Search function of the address book.

Follow the procedure described below to search using the Search function of the address book.

1 Press the **Addressbook** key four times.

*The **Addressbook** key can be used if the main screen or [Can Use AddressBook] is displayed.*

2 Press the ▲ or ▼ key to select [SEARCH], and then press the **Select** key. A screen appears, allowing you to enter the text to be searched for.

3 Using the keypad, enter the first few characters of the name programmed for the desired recipient.

Enter the name programmed in the speed dial number or the group dial number. For details on entering text, refer to "Entering Text" on page 9-4.

Text up to 10 characters long can be entered.

4 Press the **Select** key.
The number of names beginning with the text entered in step 3 is displayed.

If no names beginning with the entered text are found, [NOT FOUND] is displayed.

5 Press the ▲ or ▼ key to select the desired destination, and then press the **Select** key.

*If the desired recipient name does not appear in the search results, press the **Back** key to return to the screen allowing you to enter the text to be searched for, and then try searching for different text.*

6 When [OK=Select] appears, press the **Select** key again.

7 Press the ▲ or ▼ key to select [FINISH], and then press the **Select** key.

*To erase the selected destinations, press the **Stop/Reset** key.*

Using the Redial Function

To send a fax to the last number dialed, press the **Redial/Pause** key to recall the fax number.

1 Press the **Redial/Pause** key. Check that the desired fax number appears in the message window.

Specifying Multiple Recipients

A fax can be sent to multiple recipients in a single transmission. There are two methods for sending a fax to multiple recipients in a single transmission.

- Using group dial function
- Using Broadcast function

Sending a Fax to Multiple Recipients (Broadcast Transmission)

Directly type in multiple destinations, or select from the favorite list, speed dial destinations or address book.

A maximum of 236 destinations can be specified at one time.
A maximum of 16 destinations can be specified with direct dialing.

With the transmission result report, you can check whether the fax was sent to all recipients. For details on the transmission result report, refer to "Checking the Transmission/Reception Result From the Message Window" on page 7-3 and "About the Reports and Lists" on page 7-4.

1 Position the document to be faxed.

2 If desired, select the image quality.

For details, refer to "Selecting the Image Quality" on page 3-7.

3 Specify the fax number of the recipient.

- Direct dialing: Enter the fax number of the recipient directly using the keypad. Press the **Select** key.
- Using the favorite list (including group dial destinations): Press the **Addressbook** key, press the ▲ or ▼ key to select the number of the desired speed dial or group dial destination, and then press the **Select** key. Then, press the **Select** key again.
- Using speed dial numbers: Press the **Addressbook** key twice, use the keypad to type in the number of the desired speed dial destination, and then press the **Select** key. Then, press the **Select** key again.
- Using group dial numbers: Press the **Addressbook** key three times, use the keypad to type in the number of the desired group dial destination, and then press the **Select** key. Then, press the **Select** key again.

– Using the address book: Press the **Addressbook** key four times, and then use the List function or Search function to search for the desired destination. (For details, refer to “Using the List Function of the Address Book” on page 3-11 or “Using the Search Function of the Address Book” on page 3-12.) Then, press the **Select** key.

4 To add a destination, check that [ADD] is selected, and then press the **Select** key. Repeat step 3 until all desired destinations are specified.

– To finish specifying destinations, select [FINISH], and then press the **Select** key.

– To check the specified destinations, select [CHECK/EDIT]. After checking the destinations, press the **Back** key.

– To delete a destination, press the ▲ or ▼ key to select the destination to be deleted after selecting [CHECK/EDIT] to check the destinations, and then press the **Stop/Reset** key. When a message appears, requesting confirmation to delete the destination, select [YES], and then press the **Select** key to delete the destination. After the destination is deleted, press the **Back** key.

*The **Addressbook** key can be used if [Can Use AddressBook] is displayed.*

5 Press the **Start** key.
The document is scanned, and then the fax is sent.

*To stop the transmission, press the **Stop/Reset** key. A message appears, requesting confirmation to cancel the setting. Select [YES], and then press the **Select** key. If this is done, all selected recipients are cleared.*

*If [FAX TX] in [ADMIN. MANAGEMENT]/[PASSWORD SETTING]/[FULL FUNC. NO.] has been restricted, type in the number specified for [FULL FUNC. NO.] after pressing the **Start** key.*

Sending a Fax to Multiple Recipients (Group Dial)

Multiple destinations can be selected with a group dial destination.

Multiple destinations must have been previously registered with a group dial destination. For details, refer to "Registering a Group Dial Destination" on page 6-8.

1 Press the **Addressbook** key three times.

*The **Addressbook** key can be used if the main screen or [Can Use AddressBook] is displayed.*

2 Use the keypad to type in the group dial number(1-20), and then press the **Select** key.

*If a number was incorrectly entered, press the **Back** key, and then type in the correct number of the group dial destination.*

If the entered group dial number is not registered with a fax number, the message [NOT FAX NO.] appears. In addition, if the entered group dial number is not registered with a recipient, the message [NOT REGISTERED!] appears. Enter a group dial number registered with a fax number.

3 When [OK=Select] appears, press the **Select** key again.

4 Press the ▲ or ▼ key to select [FINISH], and then press the **Select** key.

*To erase the selected destinations, press the **Stop/Reset** key.*

5 Press the **Start** key.
The document is scanned, and then the fax is sent.

*To stop the transmission, press the **Stop/Reset** key. A message appears, requesting confirmation to cancel the setting. Select [YES], and then press the **Select** key. If this is done, all selected recipients are cleared.*

*If [FAX TX] in [ADMIN. MANAGEMENT]/[PASSWORD SETTING]/[FULL FUNC. NO.] has been restricted, type in the number specified for [FULL FUNC. NO.] after pressing the **Start** key.*

Sending a Fax at a Specified Time (Timer Transmission)

A document can be scanned and stored in memory to be sent at a specified time. This feature is convenient for sending faxes at discounted calling times.

When sending multiple documents together to a single destination at a specified time, batch transmission is useful since only a single connection is required.

If the machine is not programmed with the current time, the fax cannot be sent at the specified time. For details on specifying the time, refer to "ADMIN. MANAGEMENT Menu" on page 2-12.

Timer transmission can be combined with broadcast transmission.

1 Position the document to be faxed.

2 If desired, select the image quality.

For details, refer to "Selecting the Image Quality" on page 3-7.

3 Press the ▲ or ▼ key to select [TIMER TX], and then press the **Select** key.
The [TIMER TX SETTING] screen appears.

4 Using the keypad, enter the desired transmission time, and then press the **Select** key.

The time is set in the 24-hour format.

*If you want to correct the time, press the **Back** key, and then enter the correct time.*

5 Specify the fax number of the recipient.

Refer to "Specifying a Recipient" on page 3-9.

*To send a broadcast transmission to multiple destinations, refer to "Sending a Fax to Multiple Recipients (Broadcast Transmission)" on page 3-14. After all recipients have been specified, press the **Start** key to begin scanning. After scanning is finished, the machine with enter a standby state.*

If the specified speed dial number is registered with batch transmission settings, the fax will be sent at the time specified for the batch transmission.

6 Press the **Start** key to begin scanning, and then the machine enters transmission standby mode.

T appears in the screen when the machine is in standby mode.

If you want to cancel a timer transmission, select [CANCEL RESERV.]. For details, refer to "Cancelling a Queued Transmission" on page 3-25.

Sending a Batch Transmission

Multiple documents can be scanned and stored in the memory of this machine to be sent together to a single destination at a specified time.

From the [UTILITY] menu, batch transmission settings (transmission time) must have been registered with a speed dial number in advance. For details, refer to "Using the Speed Dial Function" on page 3-10.

1 Position the document to be faxed.

2 If desired, select the image quality.

For details, refer to "Selecting the Image Quality" on page 3-7.

3 Select destinations for the batch transmission from the favorite list, or specify their speed dial number.

For details on selecting destinations from the favorite list, refer to "Using the Favorite List" on page 3-10.

For details on specifying destinations by their speed dial number, refer to "Using the Speed Dial Function" on page 3-10.

4 Press the **Start** key to begin scanning, and then the machine enters transmission standby mode.

T appears in the screen when the machine is in standby mode.

To cancel a batch transmission, select [CANCEL RESERV.]. For details, refer to "Cancelling a Queued Transmission" on page 3-25.

Memory Transmission and Direct Transmission

There are two methods for sending documents with this machine: memory transmission and direct transmission.

Memory Transmission

With this method, the fax transmission starts after the entire document is scanned and stored in the memory. The total number of pages is automatically printed with the page number in the header. However, the memory may become full if there are many pages in the document or if the data is large due to the fine image quality (resolution).

Direct Transmission

With this method, the transmission is performed in real time in the transmission sequence of the destinations. If there are many pages in the document, the fax can be sent with this method without the memory becoming full.

As a default, [MEMORY TX] (memory transmission) is selected. The default setting can be changed from the [UTILITY] menu. For details, refer to "FAX TX OPERATION Menu" on page 2-19.

Changing the Transmission Method

The transmission method can be temporarily changed from the default setting.

1 Position the document to be faxed.

2 If desired, select the image quality.

For details, refer to "Selecting the Image Quality" on page 3-7.

3 Press the ▲ or ▼ key to select the current transmission method, and then press the **Select** key.
The [TX MODE] screen appears.

If memory transmission has been specified as the default, [MEMORY TX] appears. If direct transmission has been specified as the default, [DIRECT TX] appears.

4 Press the ▲ or ▼ key to select the desired transmission method, and then press the **Select** key.

5 Specify the fax number of the recipient.

Refer to "Specifying a Recipient" on page 3-9.

To send a broadcast transmission to multiple destinations, refer to "Sending a Fax to Multiple Recipients (Broadcast Transmission)" on page 3-14.

6 Press the **Start** key to begin scanning and sending the fax.

*To stop the transmission, press the **Stop/Reset** key. A message appears, requesting confirmation to cancel the setting. Select [YES], and then press the **Select** key.*

*If [FAX TX] in [ADMIN. MANAGEMENT]/[PASSWORD SETTING]/[FULL FUNC. NO.] has been restricted, type in the number specified for [FULL FUNC. NO.] after pressing the **Start** key.*

The transmission method returns to the default setting after the document is scanned with a normal transmission or after transmission with a manual transmission. It is useful if the most frequently used transmission method is selected as the default. For details, refer to "FAX TX OPERATION Menu" on page 2-19.

Sending a Fax Manually

Sending a Fax Manually After Using the Telephone

If the machine is connected to a telephone and the same line is used for both phoning and faxing, the document can simply be sent after talking with the recipient over the phone.

This is useful, for example, if you want to tell the recipient that you are sending a fax.

1 Load the document into the ADF.

When sending a fax manually, load the document into the ADF. An error will occur if the document is placed on the original glass.

For details on loading the document into the ADF, refer to "Sending a Fax Using the ADF" on page 3-2.

2 If desired, select the image quality.

For details, refer to "Selecting the Image Quality" on page 3-7.

3 Pick up the handset and check that the dial tone can be heard.

4 Specify the fax number of the recipient by using the telephone to dial the fax number.

The fax number of the recipient can also specified using the keypad in the control panel of this machine.

If Pulse is selected as the telephone line type, press the ✱ key to temporarily change the line type to Tone.

5 After finishing talking on the phone, the recipient should press the necessary key to start receiving the fax.
Once the recipient's fax machine is ready, a beep is sounded.

6 Press the **Start** key to begin scanning and sending the fax.

7 Replace the handset to its cradle.

*To stop the transmission, press the **Stop/Reset** key. A message appears, requesting confirmation to cancel the setting. Select [YES], and then press the **Select** key.*

*If [FAX TX] in [ADMIN. MANAGEMENT]/[PASSWORD SETTING]/[FULL FUNC. NO.] has been restricted, type in the number specified for [FULL FUNC. NO.] after pressing the **Start** key.*

Sending a Fax Manually Using the On Hook Key

1 Load the document into the ADF.

When sending a fax manually, load the document into the ADF. An error will occur if the document is placed on the original glass.

For details on loading the document into the ADF, refer to "Sending a Fax Using the ADF" on page 3-2.

2 If desired, select the image quality.

For details, refer to "Selecting the Image Quality" on page 3-7.

3 Press the **On hook** key.

4 Specify the fax number of the recipient.

*The keys for registered destinations can be used even if the **On hook** key has been pressed. For details, refer to "Specifying a Recipient" on page 3-9. (Group dial destinations cannot be specified.)*

If Pulse is selected as the telephone line type, press the ✱ key to temporarily change the line type to Tone.

5 Press the **Start** key to begin scanning and sending the fax.

*To stop the transmission, press the **Stop/Reset** key. A message appears, requesting confirmation to cancel the setting. Select [YES], and then press the **Select** key.*

*If [FAX TX] in [ADMIN. MANAGEMENT]/[PASSWORD SETTING]/[FULL FUNC. NO.] has been restricted, type in the number specified for [FULL FUNC. NO.] after pressing the **Start** key.*

Sending a Fax to a Combination of Fax Numbers (Chain Dial)

Multiple fax numbers can be combined to specify the recipients. This is called “chain dialing”.

For example, if the phone number and the extension number of a recipient are registered as different speed dial destinations, the fax number of the recipient can be specified by combining the two numbers.

1 Position the document to be faxed.

2 If desired, select the image quality.

For details, refer to “Selecting the Image Quality” on page 3-7.

3 Press the **On hook** key.

4 Directly type in the first number, or select it from the favorite list or speed dial destinations.

Refer to “Specifying a Recipient” on page 3-9.

5 Directly type in the second number, or select it from the favorite list or speed dial destinations.

6 Press the **Start** key to begin scanning and sending the fax.

*To stop the transmission, press the **Stop/Reset** key. A message appears, requesting confirmation to cancel the setting. Select [YES], and then press the **Select** key.*

*If [FAX TX] in [ADMIN. MANAGEMENT]/[PASSWORD SETTING]/[FULL FUNC. NO.] has been restricted, type in the number specified for [FULL FUNC. NO.] after pressing the **Start** key.*

Cancelling a Queued Transmission

Of the documents stored in memory and waiting to be sent, a specific document can be selected and deleted.

1 Press the ▲ or ▼ key to select [CANCEL RESERV.], and then press the **Select** key.
The [CANCEL RESERV.] screen appears.

If no jobs have been queued in memory, the message [NONE] appears.

2 Using the ▲ or ▼ key, select the job to be deleted.

The following types of job are displayed.

- *[MEMORY]: Normal transmission queued in memory*
- *[BROADCAST]: Broadcast transmission*
- *[TIMER TX]: Timer transmission (fax)*
- *[FORWARD]: Forwarding transmission*

*To check the recipients for the currently displayed broadcast transmission job, press the ▶ key. After checking, press the **Back** key to return to the previous screen.*

3 Press the **Select** key.
A message requesting confirmation to delete the job appears.

4 Check that [YES] is selected, and then press the **Select** key.
The job is deleted.

About the Fax Header

If transmission source information is set in Header setting to be printed, information such as the sender's name, fax number, transmission date/time, session number and page number can be printed by the recipient.

The following items in the header.

Element	Description
Transmission date/time	Shows the date/time that the fax was sent. The time is indicated in the 24-hour format.
Fax number	Shows the sender's fax number.
Sender's name	Shows the sender's name.
Session number	Shows the session number used to manage the sent fax.
Page number	Shows the page number. Shown as page number/total number of pages. *With a transmission using the telephone or the **On hook** key or with a direct transmission, multiple pages are not shown.*

To print the header, specify the transmission source settings with [ADMIN. MANAGEMENT]/[USER SETTING] in the [UTILITY] menu, and then set [FAX TX OPERATION]/[HEADER] to [ON]. For details refer to "FAX TX OPERATION Menu" on page 2-19.

4

Faxing From a Computer (PC-FAX)

Sending a Fax Directly From a Computer (PC-FAX)

A fax can be sent directly from a computer, instead of the computer document being printed, then loaded to be faxed.

In order to perform a PC-FAX operation, the fax driver must be installed. For details on installing the driver, refer to the [Installation Guide].

The fax driver is not compatible with IPP (Internet Printing Protocol).

PC-FAX Settings

Common Buttons

The buttons described below appear on each tab.

- [OK]: Click to exit the Printing Preferences dialog box, saving any changes made.
- [Cancel]: Click to exit the Printing Preferences dialog box without saving any changes made.
- [Apply]: Click to save all changes without exiting the Printing Preferences dialog box.
- [Help]: Click to view the help.

Settings Tab

The Settings tab allows you to

- Specify the paper size
- Specify the paper orientation
- Specify the resolution

Sender Information Tab

The Sender Information tab allows you to

- Enter sender information (for example, the sender name and sender fax number)

Address Book Tab

The Address Book tab allows you to

- Register frequently used destinations
- Register multiple frequently used destinations
- Edit/delete recipient information
- Import/export recipient information

The information registered for groups cannot be exported.

Displaying PC-FAX Settings

Windows 7/Server 2008 R2

1 From the [Start] menu, click [Devices and Printers] to open the Devices and Printers directory.

2 Right-click the [Color MF24-2 (FAX)] printer icon, and then click [Printing preferences].

If the [Color MF24-2] printer icon appears instead of the [Color MF24-2(FAX)] in the Devices and Printers directory, right-click [Color MF24-2] printer icon, choose [Printing preferences], and then click [Color MF24-2 (FAX)].

Windows Vista/Server 2008

1 From the [Start] menu, select [Control Panel], and then click [Hardware and Sound] to select [Printers].

2 Right-click the [Color MF24-2 (FAX)] printer icon, and then select [Printing Preferences].

Windows XP Home Edition

1 From the [Start] menu, click [Control Panel], then [Printers and Other Hardware], and then click [Printers and Faxes] to display the Printers and Faxes folder.

2 Right-click the [Color MF24-2 (FAX)] printer icon, and then click [Printing Preferences].

Windows XP Professional/Server 2003

1 From the [Start] menu, select [Printers and Faxes] to display the Printers and Faxes folder.

2 Right-click the [Color MF24-2 (FAX)] printer icon, and then select [Printing Preferences].

Basic PC-FAX Transmissions

1 Click [Print] in the menu of the document to be faxed.
A dialog box appears.

2 Select [Color MF24-2 (FAX)] as the printer.

3 If necessary, click the [Properties] button (or the [Advanced] button), and then specify the fax driver settings.

For details on specifying the settings, refer to "PC-FAX Settings" on page 4-2.

4 Click the [OK] button.
The Destination Settings dialog box appears.

The names of buttons that appear differ depending on the application.

5 In the [Destinations Settings] tab, specify the destination.

- When directly typing in the fax number of the recipient, enter the information in the [Name] and [Fax Number] boxes under [User/Group List].
- When selecting the recipient fax number from the address book, click the desired recipient in the list.

"P" (pause) can only be entered as an uppercase letter.

6 Click the [>] button.
The recipient moves under [Destination List].

The fax will be sent to all destinations displayed under [Destination List].

To remove a destination from under [Destination List], click the [<] button.

7 Click the [Cover Sheet] tab.

8 Under [Select Cover Sheet], select the desired cover page format.

9 If [Select Cover Sheet] is set to any setting other than [No Cover Sheet], settings can be specified for the following.

- To insert an image in the cover page, select the [Insert Image] check box, and then specify settings for the following.
  [Zoom]: Specify the size of the image.
  [X]: Specify the horizontal position of the image.
  [Y]: Specify the vertical position of the image.
- Under [Cover Sheet Information], select the information to be printed on the cover page.
  [Subject]: A subject can be printed on the fax. Type the subject in the text box.
  [Destination List]: The destination information for the recipients of the fax can be printed. If [Show all destinations] is selected, the destination information for all recipients is printed. If [Show only one whom received] is selected, the recipient is determined when the fax is sent, and the destination information for only the corresponding recipient is printed.
  [Sender]: The information for the sender of the fax can be printed. The PC-FAX settings specified on the [Sender Information] tab are printed. Click the [Edit] button to change the information in the dialog box that appears.
  [Date/Time]: The date and time of the fax transmission can be printed.

10 Click the [OK] button.
The PC-FAX data is sent.

Uninstalling the FAX Driver (for Windows)

This section describes how to uninstall the fax driver, if necessary.

You must have administrator privileges in order to uninstall the fax driver.

If the User Account Control window appears when uninstalling on Windows Vista/7/Server 2008/Server 2008 R2, click the [Allow] button or the [Continue] button.

1 From the [Start] menu, select [All Programs], [GENERIC], [MF24-2], then [Fax], and then select [UnInstall].

2 When the Uninstall dialog box appears, click the [Yes] button to uninstall.

5 Receiving Faxes

Receiving Faxes Automatically

When the machine is turned off, faxes cannot be received. Therefore, be sure to leave the machine turned on.

To print a received fax, change the paper type to Plain Paper and the paper size to A4, Legal, Letter or 8 1/2 × 13 1/2.

If [FAX RX OPERATION]/[DUPLEX PRINT] in the [UTILITY] menu is set to [ENABLE], a received fax document can be printed on both sides of the paper. For details, refer to "FAX RX OPERATION Menu" on page 2-22.

If the [RX MODE] parameter on the [FAX RX OPERATION] menu is set to [AUTO RX], no special operation is needed in order to receive the fax. Reception begins after the specified number of rings.

If the [RX MODE] parameter on the [FAX RX OPERATION] menu is set [MANUAL RX], the fax is not received automatically. For details, refer to "FAX RX OPERATION Menu" on page 2-22.

If [MEMORY RX MODE] function is set to [ON], printing does not begin automatically after the fax is received. A received document is saved in memory and is printed at the time specified for [MEMORY RX MODE] function. In addition, if [MEMORY RX MODE] function is set to [OFF], the fax is printed. For details on [MEMORY RX MODE] function in the [UTILITY] menu, refer to "FAX RX OPERATION Menu" on page 2-22. For details on specifying the settings for [MEMORY RX MODE] function, refer to "Setting Up the Memory RX Mode" on page 2-29.

Receiving Faxes Manually

When the machine is turned off, faxes cannot be received. Therefore, be sure to leave the machine turned on.

To print a received fax, change the paper type to Plain Paper and the paper size to A4, Legal, Letter or 8 1/2 × 13 1/2.

If [FAX RX OPERATION]/[DUPLEX PRINT] in the [UTILITY] menu is set to [ENABLE], a received fax document can be printed on both sides of the paper. For details, refer to "FAX RX OPERATION Menu" on page 2-22.

Manual Reception

If a telephone is connected to this machine and the same line is used for phoning and faxing, the fax can be received after picking up the handset.

1 After the telephone rings, pick up the handset.

If [RX MODE] setting on the [FAX RX OPERATION] menu is set to [MANUAL RX], the machine will continue ringing whether the call is being received from a fax machine or a telephone.

2 Press the **Start** key.

The machine starts receiving the fax.

*After completing the telephone conversation, press the **Start** key to begin receiving the fax.*

*If the handset is picked up and the call is being received from a fax machine, press the **Start** key to begin receiving the fax.*

3 Replace the handset to its cradle.

Receiving Faxes With an Operation Performed by This Machine (Manual Polling Reception)

Documents stored on the sender's machine can be received with an operation performed on this machine.

1 Press the **Fax** key to enter Fax mode.

2 Press the **On hook** key, or pick up the handset.

3 Specify the fax number.

4 Press the **Start** key.
Polling reception begins.

If the handset was picked up, return it to its cradle after reception is finished.

*If [FAX TX] in [ADMIN. MANAGEMENT]/[PASSWORD SETTING]/[FULL FUNC. NO.] has been restricted, type in the number specified for [FULL FUNC. NO.] after pressing the **Start** key.*

Forwarding Received Faxes

With forwarding, the received document is sent to the destination specified with this machine.

A fax number or e-mail address can be specified as the forwarding destination.

For details on specifying the forwarding destination, refer to "Specifying Forwarding Settings" on page 2-30.

Printing Received Faxes

What Is the Guaranteed Imageable (Printable) Area?

The printable area on all media sizes is up to 4.0 mm (0.157") from the edges of the media.

The printable area of received faxes differs depending on the sender's scanning area.

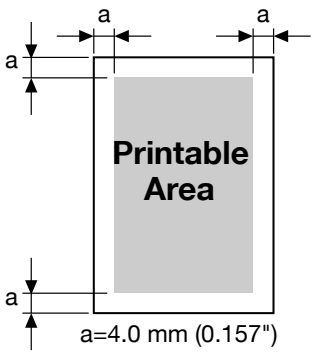

Printing Received Faxes on Both Sides of Paper

Paper can be conserved by printing on both sides of the page when a document containing multiple pages is received.

To enable duplex printing, set [FAX RX OPERATION]/[DUPLEX PRINT] in the [UTILITY] menu to [ENABLE].

However, duplex printing cannot be performed under the following conditions.

- When the paper size for printing received documents is 8 1/2 × 13 1/2
- When the received document can be printed on a single page
- When each page of the received document is to be printed on paper of a different size

For details on specifying the paper that received documents are to be printed on, refer to "Method of printing during reception" on page 5-7.

Adding the Sender's Information When Printing Faxes

If [FOOTER] setting in the [UTILITY] menu is set to [ON], information such as the sender's fax number, reception date/time, session number and page number can be printed 4.0 mm (0.157") from the bottom edge of the fax that is received and printed.

The following items in the footer.

Item	Description
This machine's fax number	Shows the fax number specified for this machine with [ADMIN. MANAGEMENT]/[USER SETTING] in the [UTILITY] menu.
Reception date/time	Shows the date/time that the fax was received. The time is indicated in the 24-hour format.
Sender's fax number	Shows the sender's fax number.
Session number	Shows the session number used to manage the received fax.
Page number	Shows the page number.

To print the footer, set [FAX RX OPERATION]/[FOOTER] to [ON]. For details refer to "FAX RX OPERATION Menu" on page 2-22.

Method of printing during reception

The relationship between the length of the received document and the document that is actually printed is shown below.

The document is printed differently depending on the setting selected for the [REDUCTION RX] parameter on the [FAX RX OPERATION] menu.

REDUCTION RX: ON

Images are only reduced in the vertical direction.

Recording paper size	Footer	Length of received image [mm]	Printing
A4	OFF	Less than 289	1 page with 100%
		290 – 313	1 page with (289/image length)% reduction
		314 – 570	Divide into 2 pages with 100%
		571 – 851	Divide into 3 pages with 100%
		852 –	Divide into 4 pages with 100%….
	ON	Less than 285	1 page with 100%
		286 – 309	1 page with (285/image length)% reduction
		310 – 562	Divide into 2 pages with 100%
		563 – 839	Divide into 3 pages with 100%
		840 –	Divide into 4 pages with 100%…
Letter	OFF	Less than 271	1 page with 100%
		272 – 295	1 page with (271/image length)% reduction
		296 – 534	Divide into 2 pages with 100%
		535 – 797	Divide into 3 pages with 100%
		798 –	Divide into 4 pages with 100%….
	ON	Less than 267	1 page with 100%
		268 – 291	1 page with (267/image length)% reduction
		292 – 526	Divide into 2 pages with 100%
		527 – 785	Divide into 3 pages or more
		786 –	Divide into 4 pages with 100%….

Recording paper size	Footer	Length of received image [mm]	Printing
Legal	OFF	Less than 348	1 page with 100%
		349 – 371	1 page with (347/image length)% reduction
		372 – 688	Divide into 2 pages with 100%
		689 – 1028	Divide into 3 pages with 100%
		1029 –	Divide into 4 pages with 100%….
	ON	Less than 344	1 page with 100%
		345 – 367	1 page with (343/image length)% reduction
		368 – 680	Divide into 2 pages with 100%
		681 – 1016	Divide into 3 pages with 100%
		1017 –	Divide into 4 pages with 100%….
8 1/2 × 13 1/2	OFF	Less than 335	1 page with 100%
		336 – 359	1 page with (335/image length)% reduction
		360 – 662	Divide into 2 pages with 100%
		663 – 989	Divide into 3 pages with 100%
		990 –	Divide into 4 pages with 100%….
	ON	Less than 331	1 page with 100%
		332 – 355	1 page with (331/image length)% reduction
		356 – 654	Divide into 2 pages with 100%
		655 – 977	Divide into 3 pages with 100%
		978 –	Divide into 4 pages with 100%….

REDUCTION RX: OFF

Recording paper size	Footer	Length of received image [mm]	Printing
A4	OFF	Less than 289	1 page
		290 – 570	Divide into 2 pages
		571 – 851	Divide into 3 pages
		852 –	Divide into 4 pages or more
	ON	Less than 285	1 page
		286 – 562	Divide into 2 pages
		563 – 839	Divide into 3 pages
		840 –	Divide into 4 pages or more
Letter	OFF	Less than 271	1 page
		272 – 534	Divide into 2 pages
		535 – 797	Divide into 3 pages
		798 –	Divide into 4 pages or more
	ON	Less than 267	1 page
		268 – 526	Divide into 2 pages
		527 – 785	Divide into 3 pages
		786 –	Divide into 4 pages or more
Legal	OFF	Less than 348	1 page
		349 – 688	Divide into 2 pages
		689 – 1028	Divide into 3 pages
		1029 –	Divide into 4 pages or more
	ON	Less than 344	1 page
		345 – 680	Divide into 2 pages
		681 – 1016	Divide into 3 pages
		1017 –	Divide into 4 pages or more

Recording paper size	Footer	Length of received image [mm]	Printing
8 1/2 × 13 1/2	OFF	Less than 335	1 page
		356 – 662	Divide into 2 pages
		663 – 989	Divide into 3 pages
		990 –	Divide into 4 pages or more
	ON	Less than 331	1 page
		332 – 654	Divide into 2 pages
		655 – 977	Divide into 3 pages
		978 –	Divide into 4 pages or more

REDUCTION RX: CUT

If an image does not fit within a page, any part of the image exceeding 24 mm is cut off and printed on the next page.

Recording paper size	Footer	Length of received image [mm]	Printing
A4	OFF	Less than 289	1 page
		290 – 313	Print into 1 page. 1-24mm of end is cut.
		314 – 570	Divide into 2 pages
		571 – 594	Divide into 2 pages. 1-24mm of end is cut.
		595 – 851	Divide into 3 pages
		852 –	Divide into 3 pages....
	ON	Less than 285	1 page
		286 – 309	Print into 1 page. 1-24mm of end is cut.
		310 – 562	Divide into 2 pages
		563 – 586	Divide into 2 pages. 1-24mm of end is cut.
		587 – 839	Divide into 3 pages
		840 –	Divide into 3 pages....

Recording paper size	Footer	Length of received image [mm]	Printing
Letter	OFF	Less than 271	1 page
		272 – 295	Print into 1 page. 1-24mm of end is cut.
		296 – 534	Divide into 2 pages
		535 – 558	Divide into 2 pages. 1-24mm of end is cut.
		559 – 797	Divide into 3 pages
		798 –	Divide into 3 pages....
	ON	Less than 267	1 page
		268 – 291	Print into 1 page. 1-24mm of end is cut.
		292 – 526	Divide into 2 pages
		527 – 550	Divide into 2 pages. 1-24mm of end is cut.
		551 – 785	Divide into 3 pages
		786 –	Divide into 3 pages....
Legal	OFF	Less than 348	1 page
		349 – 371	Print into 1 page. 1-24mm of end is cut.
		372 – 688	Divide into 2 pages
		689 – 712	Divide into 2 pages. 1-24mm of end is cut.
		713 – 1028	Divide into 3 pages
		1029 –	Divide into 3 pages....
	ON	Less than 344	1 page
		345 – 367	Print into 1 page. 1-24mm of end is cut.
		368 – 680	Divide into 2 pages
		681 – 704	Divide into 2 pages. 1-24mm of end is cut.
		705 – 1016	Divide into 3 pages
		1017 –	Divide into 3 pages....

Recording paper size	Footer	Length of received image [mm]	Printing
8 1/2 × 13 1/2	OFF	Less than 335	1 page
		336 – 359	Print into 1 page. 1-24mm of end is cut.
		360 – 662	Divide into 2 pages
		663 – 686	Divide into 2 pages. 1-24mm of end is cut.
		687 – 989	Divide into 3 pages
		990 –	Divide into 3 pages....
	ON	Less than 331	1 page
		332 – 355	Print into 1 page. 1-24mm of end is cut.
		356 –654	Divide into 2 pages
		655 – 678	Divide into 2 pages. 1-24mm of end is cut.
		679 – 977	Divide into 3 pages
		978 –	Divide into 3 pages....

6 Registering Recipients

About the Dial Register Function

Frequently used fax numbers can be registered with the [DIAL REGISTER] function so that the fax number can be easily accessed. In addition, this reduces input errors.

The following registration methods are available:

- Favorite: Frequently used speed dial and group dial destinations can be registered on the favorite list to allow the fax number to quickly be recalled. For details on registering destinations, refer to “Favorite List” on page 6-3.
- Speed Dial: Fax numbers can be registered as speed dial destinations. When sending a fax transmission, type in the speed dial number to recall the fax number. For details on registering destinations, refer to “Speed Dialing” on page 6-5.
- Group Dial: Multiple destinations can be registered together as a group dial destination. When sending a fax transmission, type in the group dial number to recall fax numbers for a broadcast transmission. For details on registering destinations, refer to “Group Dialing” on page 6-8.

When registering destinations as speed dial or group dial destinations, use the Search function to search for the recipients. For details on using the Search Function, refer to “Using the List Function of the Address Book” on page 3-11 and “Using the Search Function of the Address Book” on page 3-12.

Favorite List

Registering Destinations in the Favorite List

Frequently used speed dial and group dial destinations can be registered on the favorite list to allow the fax number to quickly be recalled. A maximum of 20 destinations can be registered on the favorite list.

Before registering destinations in the favorite list, register them as speed dial or group dial destinations.

1 Press the ▲ or ▼ key to select [UTILITY], and then press the **Select** key.

2 Press the ▲ or ▼ key to select [DIAL REGISTER], and then press the **Select** key.

3 Check that [FAVORITE] is selected, and then press the **Select** key.
The [FAVORITE] screen appears.

When registering the first destination in the favorite list, continue with step 5.

4 Check that [ADD] is selected, and then press the **Select** key.

5 Type in the speed dial number(1-220), and then press the **Select** key.

– To program a group dial number, press the **Addressbook** key, type in the group dial number(1-20), and then press the **Select** key.

*If a destination is already registered in the favorite list, select [ADD], and then press the **Select** key to display a screen for entering the speed dial number.*

For details on entering/editing text and the characters that can be entered, refer to "Entering Text" on page 9-4.

6 Press the **Select** key again.

7 Press the ▲ or ▼ key to select [FINISH], and then press the **Select** key.

– To add another destination to the favorite list, select [ADD], press the **Select** key, and then repeat steps 4 through 6.
The destination is registered in the favorite list.

*To return to the Fax mode screen, press the **Back** key until the Fax mode screen appears, or press the **Stop/Reset** key.*

Deleting Destinations from the Favorite List

A destination registered in the favorite list can be deleted.

1 Press the ▲ or ▼ key to select [UTILITY], and then press the **Select** key.

2 Press the ▲ or ▼ key to select [DIAL REGISTER], and then press the **Select** key.

3 Check that [FAVORITE] is selected, and then press the **Select** key.
The [FAVORITE] screen appears.

4 Press the ▲ or ▼ key to select [CHECK/EDIT], and then press the **Select** key.

5 Press the ▲ or ▼ key to select the destination to be deleted, and then press the **Stop/Reset** key.

6 Check that [YES] is selected, and then press the **Select** key.

7 Press the **Back** key.

To delete another destination, repeat the procedure from step 5.

8 Press the ▲ or ▼ key to select [FINISH], and then press the **Select** key.
The destination is deleted from the favorite list.

*To return to the Fax mode screen, press the **Back** key until the Fax mode screen appears, or press the **Stop/Reset** key.*

Speed Dialing

Registering a Speed Dial Destination

Frequently specified fax numbers (maximum of 220) can be registered as speed dial destinations. In addition, batch transmission settings can be specified.

1 Press the ▲ or ▼ key to select [UTILITY], and then press the **Select** key.

2 Press the ▲ or ▼ key to select [DIAL REGISTER], and then press the **Select** key.

3 Press the ▲ or ▼ key to select [SPEED DIAL], and then press the **Select** key.
The [SPEED DIAL] screen appears.

4 Use the keypad to type in the speed dial number(1-220), and then press the **Select** key.

*If LDAP search settings have been specified, a screen allowing [MANUAL SETTING] or [LDAP SEARCH] to be selected appears after the **Select** key is pressed. Select [MANUAL SETTING], and then press the **Select** key.*

For details on entering/editing numbers, refer to "Entering Text" on page 9-4.

*If the destination is already registered with the specified speed dial number, [REGISTERED!] appears. Press the **Back** key to return to the [DIAL REGISTER] screen, and then continue with step 3.*

5 Enter the name of the speed dial destination to be registered, and then press the **Select** key.

Text up to 20 characters long can be entered for the name.

For details on entering/editing text and the characters that can be entered, refer to "Entering Text" on page 9-4.

6 Use the keypad to enter the fax number of the recipient.

The fax number can contain a maximum of 50 characters.

For details on entering/editing numbers, refer to "Entering Text" on page 9-4.

7 Press the ▼ key.

8 Press the ▲ or ▼ key to select an item whose settings have already been specified.

- To specify batch transmission settings, select [BATCH TIME], press the **Select** key, and then continue with step 9.
- To specify the modem speed, select [MODEM SPEED], press the **Select** key, and then continue with step 10.

9 Use the keypad to type in the batch transmission time, and then press the **Select** key.
The batch transmission settings are specified. Continue with step 11.

For details on entering/editing text and the characters that can be entered, refer to "Entering Text" on page 9-4.

10 Press the ▲ or ▼ key to select the desired modem speed, and then press the **Select** key.
The modem speed is specified. Continue with step 11.

If a transmission error occurs, select 14.4 or 9.6 for the modem speed.

11 Press the **Back** key.

12 Press the **Select** key.
The entered information is registered with the speed dial number.

*To return to the Fax mode screen, press the **Back** key until the Fax mode screen appears, or press the **Stop/Reset** key.*

Changing/Deleting Speed Dial Information

The registered speed dial information can be changed.

1 Press the ▲ or ▼ key to select [UTILITY], and then press the **Select** key.

2 Press the ▲ or ▼ key to select [DIAL REGISTER], and then press the **Select** key.

3 Press the ▲ or ▼ key to select [SPEED DIAL], and then press the **Select** key.
The [SPEED DIAL] screen appears.

4 Use the keypad to type in the speed dial number(1-220) to be edited/deleted, and then press the **Select** key.

For details on entering/editing text and the characters that can be entered, refer to "Entering Text" on page 9-4.

5 Press the ▲ or ▼ key to select [EDIT] or [DELETE], and then press the **Select** key.

- If [EDIT] was selected, the name is displayed. Continue with step 6.
- If [DELETE] was selected, the settings registered with the speed dial number are deleted. This completes the procedure when it is deleted.

6 If desired, edit the name, fax number, modem speed and batch transmission settings, and then press the **Select** key.
The edited information is registered with the speed dial number.

If the edited speed dial destination is registered in the favorite list, with a group dial destination or as forwarding settings, a message appears, requesting confirmation to leave the edited speed dial destination registered as it is. To leave it registered as it is, select [YES]. To not leave it registered as it is, select [NO]. Then, press the ***Select*** *key.*

If a document is queued in the memory for a batch transmission and the batch transmission time is changed, the document in the memory will be sent at the time before the setting was changed.

For details on editing text, refer to "Entering Text" on page 9-4.

Group Dialing

Registering a Group Dial Destination

Fax numbers frequently specified for broadcast transmission can be registered as a group dial destination. A maximum of 50 destinations can be registered together as one group.

Before registering a group dial destination, register the destinations as speed dial destinations.

1 Press the ▲ or ▼ key to select [UTILITY], and then press the **Select** key.

2 Press the ▲ or ▼ key to select [DIAL REGISTER], and then press the **Select** key.

3 Press the ▲ or ▼ key to select [GROUP DIAL], and then press the **Select** key.
The [GROUP DIAL] screen appears.

4 Use the keypad to type in the group dial number(1-20), and then press the **Select** key.

For details on entering/editing numbers, refer to "Entering Text" on page 9-4.

*If the destination is already registered with the specified group dial number, [REGISTERED!] appears. Press the **Back** key to return to the [DIAL REGISTER] screen, and then continue with step 3.*

5 Enter the name of the group dial destination to be registered, and then press the **Select** key.

Text up to 20 characters long can be entered for the name.

For details on entering/editing text and the characters that can be entered, refer to "Entering Text" on page 9-4.

6 Use the keypad to type in the speed dial number to be registered with the group dial destination, and then press the **Select** key.

*To program a group dial number registered with a group dial destination, press the **Addressbook** key, type in the group dial number and then press the **Select** key.*

For details on entering/editing text and the characters that can be entered, refer to "Entering Text" on page 9-4.

7 Press the **Select** key again.

8 Check that [ADD] is selected, and then press the **Select** key. Repeat steps 6 through 8 until all desired destinations are specified.

– If no more recipients are to be specified, continue with step 9.

9 Select [FINISH], and then press the **Select** key.
The destinations are registered as the group dial destination.

*To return to the Fax mode screen, press the **Back** key until the Fax mode screen appears, or press the **Stop/Reset** key.*

Changing/Deleting Group Dial Information

The registered group dial information can be changed.

1 Press the ▲ or ▼ key to select [UTILITY], and then press the **Select** key.

2 Press the ▲ or ▼ key to select [DIAL REGISTER], and then press the **Select** key.

3 Press the ▲ or ▼ key to select [GROUP DIAL], and then press the **Select** key.
The [GROUP DIAL] screen appears.

4 Use the keypad to type in the number of the group dial destination to be edited/deleted, and then press the **Select** key.

For details on entering/editing text and the characters that can be entered, refer to "Entering Text" on page 9-4.

5 Press the ▲ or ▼ key to select [EDIT] or [DELETE], and then press the **Select** key.

- If [EDIT] was selected, the name is displayed. Continue with step 6.
- If [DELETE] was selected, the settings programmed for the group dial number are deleted. This completes the procedure when it is deleted.

6 If you want to change the name of the group, enter the new name, and then press the **Select** key.

For details on editing text, refer to "Entering Text" on page 9-4.

7 Add/delete destinations.

- To add a destination, check that [ADD] is selected, and then press the **Select** key. Type in the speed dial number, press the **Select** key, and then press the **Select** key again.
- To delete a destination, press the ▲ or ▼ key to select [CHECK/EDIT], and then press the **Select** key.
  Press the ▲ or ▼ key to select the destination to be deleted, and then press the **Stop/Reset** key.
  Check that [YES] is selected, and then press the **Select** key.
  The destination is deleted from the group dial list.

8 Press the ▲ or ▼ key to select [FINISH], and then press the **Select** key.
The edited information is registered with the group dial number.

Confirmation Mode 7

About the Machine's Counters

The operations performed since this machine was installed can be checked with [REPORT/STATUS] in the menu. Follow the procedure described below to check the fax-related counters.

Checking the Counter for Fax Printing

This counter shows the total number of fax prints made since this machine was installed.

1 Press the ▲ or ▼ key to select [REPORT/STATUS], and then press the **Select** key.

2 Check that [TOTAL PRINT] is selected, and then press the **Select** key. The [TOTAL PRINT] screen appears.

3 Press the ▲ or ▼ key to scroll through the screen until [FAX PRINT] appears.
Check the total number of pages printed as faxes.

*To return to the Fax mode screen, press the **Stop/Reset** key.*

Checking the Counter for Total Scans

This counter shows the total number of scans made, excluding copies, since this machine was installed.

1 Press the ▲ or ▼ key to select [REPORT/STATUS], and then press the **Select** key.

2 Check that [TOTAL PRINT] is selected, and then press the **Select** key. The [TOTAL PRINT] screen appears.

3 Press the ▲ or ▼ key to scroll through the screen until [TOTAL SCAN] appears.
Check the total number of scans made with faxes.

*To return to the Fax mode screen, press the **Stop/Reset** key.*

Checking the Transmission/Reception Result From the Message Window

The results of a maximum of 60 fax transmissions/receptions can be viewed.

In addition, the transmission/reception results that are displayed can be printed by pressing the **Start (B&W)** key.

1 Press the ▲ or ▼ key to select [REPORT/STATUS], and then press the **Select** key.

2 Press the ▲ or ▼ key to select [TX/RX RESULT], and then press the **Select** key.
The [TX/RX RESULT] screen appears and displays the communications log.

*To return to the Fax mode screen, press the **Select** key.*

About the Reports and Lists

Reports on the status of fax transmissions/receptions and the speed dial settings can be printed.

The following reports and lists can be printed with this machine.

For details on printing the reports and the lists, refer to the following section.

Printing the Reports and Lists

1 Press the ▲ or ▼ key to select [REPORT/STATUS], and then press the **Select** key.

2 Press the ▲ or ▼ key to select [REPORT], and then press the **Select** key.

3 Press the ▲ or ▼ key to select the desired report, press the **Select** key, and then **Start** key.
The report is printed

TX RESULT REPORT

The session number, recipient name, date sent, starting time of transmission, number of document pages, time required, mode, and transmission result are printed.

The machine can also be set to print this report with each transmission, only when an error occurs, or not at all. For details, refer to "REPORTING Menu" on page 2-26.

SESSION	FUNCTION	NO.	DESTINATION STATION	DATE	TIME	PAGE	DURATION	MODE	RESULT
0001	TX	001	AAA NEWYORK 012345678	APR.19	18:00	010	00h02min21s	G3	STOP
			00A0: TX CANCEL						

RX RESULT REPORT

The session number, date received, starting time of reception, number of pages received, time required, mode, and reception result are printed.

The machine can also be set to print this report with each reception, only when an error occurs, or not at all. For details, refer to "REPORTING Menu" on page 2-26.

SESSION	FUNCTION	NO.	DESTINATION STATION	DATE	TIME	PAGE	DURATION	MODE	RESULT
0001	RX	001	098765432	APR.19	18:00	001	00h02min21s	ECM	NG
			0014:ERROR DURING RX						

ACTIVITY REPORT

The operation number, session number, date of operation, starting time of transmission/reception, type of operation (transmission or reception), recipient name, number of pages sent/received, mode, and transmission/reception result are printed.

The machine can also be set to print this report automatically after every 60 transmissions/receptions. For details, refer to "REPORTING Menu" on page 2-26.

NO.	SESSION	DATE	TIME	TX/RX	DESTINATION STATION	PAGE	DURATION	MODE	RESULT
01	0001	APR.19	16:32	TX---	AAA NEWYORK 012345678	006	00h01min16s	ECM	OK
02	0002	APR.19	18:00	---RX	098765432	001	00h02min21s	ECM	NG 0034
03	0003	APR.19	18:00	---RX	098765432	012	00h02min48s	ECM	OK
04	0004	APR.19	19:12	TX---	HEAD OFFICE 024682468	001	00h00min56s	ECM	OK

MEMORY DATA LIST

This is a list of documents queued to be sent and documents specified for timer transmission (including batch transmission).

The session number, type of operation being performed, time, recipient name, and number of document pages are printed.

SESSION	FUNCTION	TIME	NO.	DESTINATION STATION	PAGE
0001	TX	18:00	001	SP-001 AAA NEWYORK 012345678	012

MEMORY IMAGE PRINT

A reduced image of the first page of the document waiting to be sent in addition to the session number, type of operation being performed, recipient name, date, time, and number of document pages are printed.

FAVORITE LIST

The destinations registered in the favorite list are printed in the order that they appear in the favorite list.

FA-NO.	DESTINATION STATION	DESTINATION NUMBER	SPEED	SET DATE
FA-01	AAA NEWYORK	012345678	33.6	JAN.20.2006
FA-02	AAA TOKYO	098765432	33.6	JAN.20.2006
FA-03	HEAD OFFICE	024682468	33.6	FEB.12.2006
FA-04	0P02345678	0224466880	12.8	FEB.12.2006

SPEED DIAL LIST

The recipients programmed for the speed dial numbers are printed in numerical order. The time specified for speed dial numbers registered with batch transmission settings appears below [DETAIL].

SP-NO.	DESTINATION STATION	DESTINATION NUMBER	DETAIL	SET DATE	
SP-001	AMSTERDAM OFFICE	0P09876543	23:00	33.6	JAN.20.2006
SP-002	KOREA OFFICE	0P01357913		33.6	JAN.20.2006
SP-003	ABCDEF	024682468		33.6	FEB.12.2006
SP-004	POST OFFICE	0224466880		14.4	FEB.12.2006

GROUP DIAL LIST

The group dialing settings are printed in numerical order.

KEY-NO.	NAME	NO.	DESTINATION STATION
GP-01	GROUP-01	01	SP-002 AAA TOKYO 098765432
		02	SP-004 NJ OFFICE 0P02345678
		03	SP-001 AMSTERDAM OFFICE 0P09876543

Troubleshooting 8

Problems When Sending Faxes

If the fax cannot be sent correctly, refer to the following table, and then perform the indicated operation. If the fax still cannot be sent correctly, even after performing the described operations, contact your technical representative.

For details on the error messages, refer to "Error Messages on the Message Window" on page 8-5. For details on troubleshooting procedures for document misfeeds, paper misfeeds, poor print quality, or empty consumables, refer to the [Printer/Copier/Scanner User's Guide] on the Documentation CD/DVD.

Symptom	Cause	Solution
The document is not scanned.	The document is too thick, too thin or too small.	Use the original glass to send the fax.
The document is scanned at an angle.	The document guides are not adjusted to the width of the document.	Slide the document guides to fit the width of the document.
The fax received by the recipient is blurry.	The document is incorrectly positioned.	Position the document correctly.
	The original glass is dirty.	Clean the original glass.
	The text in the document is written too faint.	Adjust the resolution.
	There may be a problem with the telephone connection.	Check the telephone line, and then try sending the fax again.
	There may be a problem with the recipient's fax machine.	Make a copy to check that this machine is operating correctly, and then, if the copy was printed correctly, have the recipient check the condition of their fax machine.
The fax received by the recipient is blank.	The document was sent with the front side facing down (when the ADF is used).	Load the document to be faxed facing up.

Symptom	Cause	Solution
Transmission is not possible.	The transmission procedure may have been performed incorrectly.	Check the transmission procedure, and then try sending the fax again.
	The fax number may be wrong.	Check the fax number.
	The destination in the favorite list, the speed dial destination or the group dial destination may be incorrectly programmed.	Check that the keys were correctly programmed.
	The telephone line may be incorrectly connected.	Check the telephone line connection. If it is disconnected, connect it.
	There may be a problem with the recipient's fax machine (such as, no paper or turned off).	Contact the recipient.

Problems When Receiving Faxes

If the fax cannot be received correctly, refer to the following table, and then perform the indicated operation. If the fax still cannot be received correctly, even after performing the described operations, contact your technical representative.

For details on the error messages, refer to "Error Messages on the Message Window" on page 8-5. For details on troubleshooting procedures for document misfeeds, paper misfeeds, poor print quality, or empty toner, refer to the [Printer/Copier/Scanner User's Guide] on the Documentation CD/DVD.

Symptom	Cause	Solution
The received fax is blank.	There may be a problem with the telephone connection or with the caller's fax machine.	Check that the machine can make clean copies. If it can, have the caller send the fax again.
	The caller may have loaded the pages backward.	Contact the caller.

Symptom	Cause	Solution
Faxes cannot be received automatically.	The machine is set to receive faxes manually.	Set the machine to automatic reception.
	Memory is full.	Load paper if it is empty, and then print the faxes stored in memory.
	The telephone line is incorrectly connected.	Check the telephone line connection. If it is disconnected, connect it.
	There may be a problem with the caller's fax machine.	Make a copy to check that this machine is operating correctly, and then, if the copy was printed correctly, have the recipient check the condition of their fax machine.

Other Problems

Symptom	Cause	Solution
The number of document pages indicated in the transmission result report is different from the number of pages in a batch transmission.	Memory is full.	During batch transmission, the number of document pages indicated in the transmission result report may be different from the number of pages in the transmission if the memory is full.

Error Messages on the Message Window

Error message	Cause	Solution
ADMINISTERED BY PC PLEASE WAIT!	This machine is accessing LSU or the Admin. Mode of Web Connection.	• Log off from Web Connection. • Exit LSU. • If no operation is performed for 600 seconds, the main screen appears.
COMMUNICATION ERROR (####)	• Communication is not possible because of some problem in the machine. • Communication is not possible because of a problem with the recipient/caller's fax machine.	Check the transmission results.
Check Fax Mode	A fax error occurred while an operation was being performed in Copy mode or Scan mode.	Press the **Fax** key to check the error condition, and take appropriate measures.
HUNG UP THE PHONE	The receiver of the connected telephone is lifted.	Replace the receiver of the connected telephone on the hook.
LINE PROBLEM CHECK LINE	• The telephone dialing system or telephone wiring system is not set correctly. • The telephone cable is not attached correctly.	• Check the telephone dialing system or telephone wiring system and use the appropriate configuration menu to make the correct settings. • Correctly connect the telephone cable.
MEMORY FILE FULL	The number of items registered in the memory has exceeded the maximum allowed.	If [MEMORY RX MODE] is set to [ON], cancel memory reception mode, and print received documents stored in the memory.

Error message	Cause	Solution
MEMORY FULL	• While sending a fax, the size of the data for the scanned image has exceeded the capacity of the memory. • While receiving a fax, the size of the data for the scanned image has exceeded the capacity of the memory.	• If [MEMORY RX MODE] is set to [ON], cancel memory reception mode, and print received documents stored in the memory. • Send the fax manually.
REDIAL ALL FAILED	All redial attempts failed because either the recipient's line is busy or there was no answer.	Check the condition of the recipient's line, and then try sending the fax again.

Appendix 9

Technical Specifications

Compatible lines	PSTN (Public Switched Telephone Network), PBX (Private Branch eXchange)
Compatibility	ECM/Super G3
Modem speed	V.34 (up to 33.6 Kbps)
Fax transmission speed	3 sec/page (at V.34)
Coding method	MH, MR, MMR, JBIG
Fax memory	6 MB (approx. 384 pages)
Document	• ADF Width: 140 to 216 mm Length: 148 to 500 mm (500 mm: Fax mode with ADF) • Original Glass A5, A4, Statement, Letter
Paper size	A4, Letter, Legal, 8 1/2 × 13 1/2
Edge erase	4.0 mm (top, bottom, left, right)
Transmission resolution	Standard: 203 × 98 dpi Fine: 203 × 196 dpi Super Fine: 203 × 392 dpi
PC-FAX	Operating system: Windows Server 2003 (32-bit/64-bit) Windows XP (32-bit/64-bit) Windows Server 2008 (32-bit/64-bit) Windows Vista (32-bit/64-bit) Windows Server 2008 R2 Windows 7 (32-bit/64-bit) Interface: USB 2.0 High Speed compliant Network (TCP/IP (RAW port, LPR)) PC requirements: Minimum specifications: CPU speed: Pentium 200MHz RAM: 128 MB Recommended specifications: CPU speed: Pentium 4/1.6GHz or greater RAM: 256 MB or greater Driver command language: GDI Driver compression: JBIG

For details on other specifications, refer to the [Printer/Copier/Scanner User's Guide] on the Documentation CD/DVD.

Entering Text

When specifying the user name or programming the recipient name, letters, accented characters, numbers and symbols can be entered.

Key Operation

Use the keypad to enter numbers, letters, and symbols.

List of characters available with each key of the keypad

Entering Fax Numbers

Keypad Key	Available characters	Available characters (Registration of USER FAX NO.) *	
	[1]	[1]	[A]
1	1	1	-1
2	2	2	2
3	3	3	3
4	4	4	4
5	5	5	5
6	6	6	6
7	7	7	7
8	8	8	8
9	9	9	9
0	0	0	(space)0
✱	✱		
#	#		+

* To display your fax number, select [ADMIN. MANAGEMENT]/[USER SETTING]/[USER FAX NUMBER] in the [UTILITY] menu.

Entering Names

Keypad Key	Available characters	
	[1]	[A]
1	1	.,'?¿!¡"1-()@/:;_
2	2	ABC2abcÆÇàáâãäåæç
3	3	DEF3defÐèéêëð
4	4	GHI4ghìíîï
5	5	JKL5jkl€£¢
6	6	MNO6mnoØŒñòóôõöøœº
7	7	PQRS7pqrsß$
8	8	TUV8tuvùúûü
9	9	WXYZ9wxyzÞýþ
0	0	(space)0
✱		
#	#	*+×÷=#%&<>[]{}|µ^`~

Entering Email Addresses

Keypad Key	Available characters	
	[1]	[A]
1	1	.@_-1
2	2	ABC2abc
3	3	DEF3def
4	4	GHI4ghi
5	5	JKL5jkl
6	6	MNO6mno
7	7	PQRS7pqrs
8	8	TUV8tuv
9	9	WXYZ9wxyz
0	0	(space)0
✱		
#	#	+&/*=!?()%[]^`´{}|~$,:

Changing Input Mode

Each press of the ✱ key switches the input mode between numbers and letters.

[1…]: Numbers can be typed in.

[A…]: Letters can be typed in.

Inputting Example

The procedure for entering text is described below, using “NJ Office” as an example.

1 Press the **6** key twice.
“N” is entered.

2 Press the **5** key once.
“J” is entered.

3 Press the **0** key once.
A space is entered.

4 Press the **6** key three times.
“O” is entered.

5 Press the **3** key seven times.
“f” is entered.

6 Press the ▶ key.
The cursor moves to the right.

7 Press the **3** key seven times.
“f” is entered.

8 Press the **4** key seven times.
“i” is entered.

9 Press the **2** key seven times.
“c” is entered.

10 Press the **3** key six times.
“e” is entered.

Correcting Text And Input Precautions

- To erase all entered text, hold down the **Back** key.
- To delete only part of the entered text, use the ◄ or ► key to move the cursor (_) to the character that you want to delete, and then press the **Back** key.
- If the same key is to be used to enter two characters in a row, press the ► key after selecting the first character. (Refer to the above inputting example.)
- To enter a space, press the **0** key.

Index

A

Address book
List 3-11
Search 3-12
Addressbook key 2-2
ADF 1-2
Sending faxes 3-2
Adjusting
Density 3-8
Image Quality 3-7
Resolution 3-7

B

Back key 2-2
Batch transmission 3-19

C

Canceling
Memory 3-25
Chain dial 3-24
Changing/deleting
Favorite list 6-4
Group dial 6-10
Speed dial 6-7
Confirm 7-1
Control panel 1-2
Counters 7-2
Fax printing 7-2
Total scans 7-2

D

Deleting
Memory 3-25
Density, Adjusting 3-8
Dialing, direct 3-9
Direct transmission 3-20
Document feed tray 1-2
Document guide 1-2
Duplex Print 5-5

E

Entering text 9-4
Correcting text 9-7
Input mode 9-6
Input precautions 9-7
Error messages 8-5

F

Favorite list
Deleting 6-4
Registering 6-3
Specifying recipient 3-10
Fax key 2-2
Fax mode screen 2-5
Footer 5-6
Forwarding 5-4
Specifying 2-30

G

Group dial
Changing/deleting 6-10
Registering 6-8
Specifying recipient 3-16

H

Header 3-26

I

Image Quality, Adjusting 3-7
Imageable area 5-5
Input mode 9-6

K

Key operation 9-4
Keypad 2-2

L

Lists 7-4
FAVORITE LIST 7-6
GROUP DIAL LIST 7-6
MEMORY DATA LIST 7-5
Printing 7-4
SPEED DIAL LIST 7-6

M

Manual
Reception 5-3
Transmission 3-22
Manual Polling RX 5-4
Manual transmission
On hook key 3-23
Using telephone 3-22
Memory
Cancel/delete 3-25
Queue 3-25
Memory reception 2-28
Memory RX mode 2-28
Setting up 2-29
Turning off 2-30
Memory transmission 3-20
Menu
Utility 2-9
Message window 2-2
Multiple recipients
Broadcast 3-14
Group dial 3-16

O

On hook key 2-2
Original glass 1-2
Sending faxes 3-5

P

Parts 1-2
PC-FAX 4-2
Basic transmission 4-5
Settings 4-2
Uninstalling 4-6
PC-FAX Settings
Address Book tab 4-3
Common buttons 4-2
Displaying settings 4-4
Sender Information tab 4-2
Settings tab 4-2
Printable area 5-5

R

Receiving faxes
- Automatic reception 5-2
- Forwarding 5-4
- Manual reception 5-3
- Memory reception 2-28
- Method of printing 5-7
- Printing 5-5

Reception result 7-3, 7-5

Recipients
- Dial register function 6-2
- Favorite list 6-3
- Group dial 6-8
- Multiple recipients 3-14
- Registering 6-1
- Speed dial 6-5

Redial 3-13

Redial/Pause 2-2

Registering recipients 6-1, 6-2
- Favorite list 6-3
- Group dial 6-8
- Speed dial 6-5

Reports 7-4
- ACTIVITY REPORT 7-5
- MEMORY IMAGE PRINT 7-6
- Printing 7-4
- RX RESULT REPORT 7-5
- TX RESULT REPORT 7-4

Resolution, Adjusting 3-7

S

Select key 2-2

Sending faxes
- Basic fax operation 3-2
- Batch transmission 3-19
- Chain dial 3-24
- Direct transmission 3-20
- Manual transmission 3-22
- Memory transmission 3-20
- PC-FAX transmission 4-5
- Redial 3-13
- Timer 3-17
- Using ADF 3-2
- Using original glass 3-5

Specifications 9-2

Specifying a recipient
- Direct dialing 3-9
- Favorite list 3-10
- Group dial 3-16
- Speed dial 3-10

Specifying recipient 3-9
- Address book 3-11, 3-12
- List 3-11
- Search 3-12

Speed dial
- Changing/deleting 6-7
- Registering 6-5
- Registering (manual setting) 6-5
- Specifying recipient 3-10

Start key 2-2

Stop/Reset key 2-2

Symbol, Message window 2-8

T

Timer transmission 3-17

Transmission method 3-20
- Changing transmission method 3-20
- Direct transmission 3-20
- Memory transmission 3-20

Transmission result 7-3, 7-4

Troubleshooting 8-1
- Error messages 8-5
- Receiving faxes 8-3
- Sending faxes 8-2

U

Utility
- ADMIN. MANAGEMENT 2-12
- DIAL REGISTER 2-18
- FAX RX OPERATION 2-22
- FAX TX OPERATION 2-19
- MACHINE SETTING 2-10
- REPORTING 2-26
- Specifying Settings 2-28

***N* ° 11-119**

DICHIARAZIONE CE DI CONFORMITA' del COSTRUTTORE secondo ISO/IEC 17050
MANUFACTURER'S CE DECLARATION of CONFORMITY according to ISO/IEC 17050

OLIVETTI S.p.A Via Jervis, 77 - IVREA (TO) - ITALY

Dichiara sotto la sua responsabilita' che il prodotto:
Declares under its sole responsibility that the product:

Categoria generale:	**Apparecchiature per la Tecnologia dell' Informazione**
Equipment category:	***Information Technology Equipment***
Tipo di apparecchiatura:	**Multifunzionale Laser Digitale a colori**
Product type:	***Color Digital Laser Multifunctional***
Modello/*Product name*:	**d-Color MF2400**
Opzioni/*Options:*	**PF-P09, Memory (1024 Mb max), HD-P03, MK-725**

è CONFORME alla Direttiva 1999/5/CE del 9 marzo 1999
is in compliance with directive 99/5/EC dated 9th march 1999

e soddisfa i requisiti essenziali di **Compatibilità Elettromagnetica e di Sicurezza** previsti dalle Direttive:
and fulfills the essential requirements of Electromagnetic Compatibility and of Electrical Safety as prescribed by the Directives:

2009/125 del 21 Ottobre 2009; (ErP)
2009/125 dated 21th October 2009;
2004/108/CE del 15 Dicembre 2004; (EMC)
2004/108/EC dated 15th December 2004;
2006/95/CE del 12 Dicembre 2006; (LVD)
2006/95/EC dated 12th December 2006;

in quanto progettato e costruito in conformità alle seguenti Norme Armonizzate:
since designed and manufactured in compliance with the following European Harmonized Standards:

EN 55022:2006 + A1:2007 (Limits and methods of measurements of radio interference characteristics of Information Technology Equipment) / Class B;
EN 61000-3-2:2006 + A1:2009 + A2:2009 (Electromagnetic Compatibility (EMC) - Part 3: Limits - Section 2: Limits for harmonic current emissions (equipment input current ≤ 16 A per phase)
EN 61000-3-3:2008 (Electromagnetic Compatibility (EMC) - Part 3: Limits - Section 3: Limitation of voltage fluctuations and flicker in low voltage supply systems for equipment with rated current up to and including 16A);
EN 55024:1998 + A1:2001 + A2:2003 (Electromagnetic Compatibility – Information technology equipment – Immunity characteristics – Limits and methods of measurement);
EN 62311:2008 (Assessment of electronic and electrical equipment related to human exposure restrictions for electromagnetic fields (0 Hz - 300 GHz))
EN 60950-1:2006 + A11:2009 (Safety of Information Technology Equipment, including electrical business equipment.)
EN 60825-1:2007 (Radiation Safety of laser products, equipment classification, requirements and user's guide).
ES 203 021-1: V 2.1.1, ES 203 021-2: V 2.1.2, ES 203 021-3: V 2.1.2 (Referred Voluntary Requirements).
EG 201 120: V 1.1.1, EG 201 187: V 1.1.1 (Referred Voluntary Requirements).
1275/2008/EC

La conformità ai suddetti requisiti essenziali viene attestata mediante l'apposizione della **Marcatura CE** sul prodotto.
*Compliance with the above mentioned essential requirements is shown by affixing the **CE marking** on the product.*

Ivrea, 6 Settembre 2011
Ivrea, 6th September 2011

Walter Fontani
Quality V.P.
Olivetti S.p.A.

Note: 1) La Marcatura CE è stata apposta nel 2011
Notes: 1) CE Marking has been affixed in 2011
2) Il Sistema della Qualità è conforme alle norme serie UNI EN ISO 9000.
2) The Quality System is in compliance with the UNI EN ISO 9000 series of Standards